Distribution customer connection requirements

3rd April 2023

Original Issue: May 2019

Content Owner/Custodian: Distribution Grid Strategy and Planning

This Revision: Fifth – Revision 3 - April 2023

Date for Next Review: April 2028

© Western Power
ABN 18540492861

Document release information

Client	Distribution Grid Strategy and Planning
Project name	Network Asset Public Technical Document
Document number	43517326 Word - 48688244 PDF
Document title	Distribution customer connection requirements
Revision status	Fifth edition - Revision 3

Authorisation

Description	Title	Name	Date
Proposed	Author	R Hale	Refer to DCR for wet signatures.
Reviewed	DGS&P Principal Engineer	N Wilmot	
Reviewed	DGS&P Team Leader	C Francis	
Endorsed	DGS & P Manager	J Lukas	
Endorsed	GT Head of Function	B Bristow	

Revision history

Revision #	Issue date	PDF DM/EDM	Revised By	Description
Initial	1 May 2019	43517326	R Hale	Original
Second	30 Aug 2019	43517326	R Hale	Amended drawings: 1-00-1; 1-05-01; 1-05-1N; 1-05-2; 1-05-3; 1-06-3:
Third	2 Jan 2020	43517326	R Hale	Amended drawings 1-05-1, 1-05-3, 1-05-4, 1-05-5, 1-07-N

Revision #	Issue date	PDF DM/EDM	Revised By	Description
Fourth	2 Sept 2020	43517326	R Hale	Amended clauses 3, 8.1.1, 9.2.14, 9.3.1, 9.3.2 Amended drawings 1-00-1, 1-01-1, 1-01-2, 1-01-5, 1-01-N, 1-01-10, 1-10-10N, 1-05-1, 1-05-1N, 1-05-2, 1-05-4, 1-05-6, 1-05-N, 1-07-3, 1-07-N CBD 2-06-1 2-08-1, 2-08-2, 2-08-3, CBD option A & B 2-11-1, 2-12-1, 2-14-1, 2-16-1
	16 Nov 2020	43517326	R Hale	Amended drawings for PENDA (1st addendum) 1-05-3, 1-05-4, 1-05-5, 1-06-4, 1-06-5,
	9 Apl 2021	43517326	R Hale	Amended drawings for PENDA (2nd addendum) 1-00-5, 1-00-6, 1-05-3, 1-05-4, 1-05-5 Optional HV metering unit arrangement 1-07-3 Sht 2 of 4
	9 May 2021	43517326	R Hale	Amended drawings for PENDA (3rd addendum) 1-05-4, 1-05-5
Fifth	30 Oct 2021	43517326	R Hale	Alignment with the WASIR 2021 and current reference updates
	21 Dec 2021		N Wilmot R Hale	New clause 8.1 and associated sub clauses New drawings 1-01-3 - sheets 1 to 3 - EG control options added
	3 June 2022			Drawing 1-00-5 amended (XS1600NE configuration) New drawing added - 1-01-3 sheet 4 of 4 - EG remote SWB control option added Reference to embedded generation (EG) technical requirements added to various drawing notes. 1-05-1 to 1-05-5 - drawing titles amended
	3 April 2023		R Hale	Drawing added - 1-05-1 sheet 3 of 4 100kW Community Power bank meter connection (Network Metered) added 1-05-1 series drawing titles amended

An appropriate citation for this paper is:

Distribution customer connection requirements

Western Power

363 Wellington Street
Perth WA 6000
GPO Box L921 Perth WA 6842

T: 13 10 87 | Fax: 08 9225 2660
TTY 1800 13 13 51 | TIS 13 14 50

Electricity Networks Corporation
ABN 18 540 492 861westernpower.com.au

Page left intentionally blank

FOREWORD

This Fifth edition (Revision 3) of the WA Distribution customer connection requirements (DCCR) is a revised and updated edition of the now superseded Introduction, Sections One and Two of the Distribution substation manual (DSM)

The document details *network* arrangements for both *consumer* connections and the interconnection of *substations* to Western Power's LV/HV *distribution network* within the South West Interconnected Network (SWIN).

These *requirements* do not contain detailed information on the practices, processes and procedures associated with the design, construction, installation, connection, energisation and or operation of depicted *network infrastructure*, *network* equipment or connection arrangements.

For specific information pertaining to infrastructure or *network* equipment, please refer one of the following *network technical and connection requirements* and publications or go to Western Power's public website for the complete range of publicity listed documents:

- Distribution construction standards handbook. (DCSH)
- Distribution substation plant manual. (Previously known as DSM Sections 3 to 9).
- Embedded generation EG technical requirements (Partially known as Network integration guideline)
- Underground distribution schemes manual. (UDS)
- Underground cable installation manual. (UCIM)
- Western Australian Service and installation requirements . (WASIR)
- Western Australian Electrical Requirements. (WAER)

The content of these documents, together with Western Powers detailed design *requirements*, form the key elements in the process of communicating Western Power's *network* supply and connection arrangement *requirements* to *consumers* , industry and related *network* design, construction and operational personnel.

With the introduction of this document and transition to Distribution substation plant manual, additional work has been initiated to review and further define the appropriate levels of AS-5577 compliance. During this interim period, readers should reference the Distribution substation plant manual (DSPM) and the WA Service and installation requirements(WASIR) for current *requirements* and practices.

Western Power acknowledges the valuable support and contribution made during the development of this document by officers and personnel from both industry and Western Power.

Feedback on any aspect of the document is encouraged, welcomed and valued. Western Power looks forward to your continued support and involvement in the future development of new editions of the Distribution customer connection requirements.

Ben Bristow

Head of Grid Transformation
Western Power

Page left intentionally blank

Contents

Contents **8**

1. Disclaimer **10**

2. Document ownership and administration **10**

3. Application **10**

3.1 Application date 10

4. Introduction **11**

5. Scope **11**

5.1 In scope 11

5.1.1 Section 8 drawings 12

5.1.2 Section 9 drawings 12

5.2 Out of scope 12

6. Compliance with these requirements **12**

7. Definitions **12**

8. Consumer connections **13**

8.1 Auxiliary functionality of AMI for DER management 13

8.1.1 Introduction 13

8.1.2 Control methods 13

8.1.2.1 General 13

8.1.2.2 Main switch 14

8.1.2.3 Exporting EG system control 14

8.1.2.4 Export limited EG System control 15

8.1.2.5 Systems with BESS 15

8.1.2.6 Summary of options 16

8.2 Arrangement drawings 17

8.2.1 Drawing index 17

8.2.2 Drawing revision list 19

8.2.3 Drawing legend 21

8.2.4 Fuse charts 22

8.2.5 LV connections 27

8.2.6 LV district substations 40

8.2.7 LV sole use connections 53

8.2.8 HV consumer owned substations 58

9. HV network arrangements **68**

9.1 Planning philosophies 68

9.1.1 General 68
9.1.2 6.6 KV philosophy 68
9.1.3 11 KV philosophy 68
9.1.4 22 KV philosophy 69
9.1.5 33 KV philosophy 69
9.2 Design notes 69
9.2.1 Note 1 69
9.2.2 Note 2 70
9.2.3 Note 3 70
9.2.4 Note 4 70
9.2.5 Note 5 70
9.2.6 Note 6 71
9.2.7 Note 7 71
9.2.8 Note 8 71
9.2.9 Note 9 71
9.2.10 Note 10 71
9.2.11 Note 11 71
9.2.12 Note 12 71
9.2.13 Note 13 71
9.2.14 Note 14 72
9.3 HV network arrangement drawings 73
9.3.1 Drawing index 73
9.3.2 Drawing revision list 74
9.3.3 Drawing legend 75
9.3.4 Overhead district and sole use 76
9.3.5 Overhead consumer owned 87
9.3.6 Underground district and sole use 97
9.3.7 Underground consumer owned 105

1. Disclaimer

These *requirements* have been compiled and published by Western Power using definitions, drawings, guidelines, standards, and *network* information consistent with the relevant Acts and Regulations of the state of Western Australia at the date of publication.

Users are responsible for determining the relevance and applicability of that material, to their specific circumstance. Legislation, standards and electricity industry publications are revised periodically. Consequently, this document may at times require amendment therefore users must make their own inquiries to ensure compliance.

2. Document ownership and administration

This document is the property of the copyright owner, being Electricity Networks Corporation trading as Western Power, who reserves the right to develop, revise, administer and or publish amended content, as deemed appropriate.

3. Application

This edition supersedes all previous versions of the Introduction, Sections One and Two of the Distribution substation manual (DSM) and any previous editions of this document.

The application of the information contained within this document and subsequent amendments are not retrospective unless an existing connection, *network* arrangement, *electrical installation* or part thereof is *altered*, modified, upgraded or constitutes a safety issue as determined by an authorised inspector under the Energy Coordination Act 1994.

These *requirements* are to be applied to all supply arrangements, *consumer electrical installations* and connections as soon as practical, during the six month period directly following the date of publication, after which time these *requirements* are deemed to be mandatory.

Installation, operational or technical detail is to be sourced from the relevant subject specific *network technical and connection requirements* including but not limited to the DSPM, EG, NIG, UDS and the WASIR accessible via Western power's public website.

Where work on an *electrical installation*, connection or *network* arrangement, has commenced or formal *contracts* to undertake electrical work were signed prior to the publication of these *requirements*, Western Power may grant an exemption from these *requirements* on receipt of an appropriate application.

Where an exemption is granted the electrical work is to be completed in accordance with the previously published subject specific *network technical and connection requirements*. An exemption will not be granted where there is a safety issue or concern.

Additionally, there may be *connection requirements*, configurations or unusual situations that cannot be or have not been covered by these *requirements*. In such circumstances Western Power must be advised and consulted before any design or installation work commences.

3.1 Application date

These *requirements* shall apply from the date shown in the "Revision history" located at the front of the document.

4. Introduction

These *requirements* have been developed to promote, support and complement the documents listed within the scope, through specific references to the design of the *consumer* supply/connection arrangement at the *point of supply(connection)* (PoS).

This document contains diagrams showing standard connection arrangements for low *voltage* (LV) and high *voltage* (HV) *consumers* to Western Power's *distribution network* within the South West Interconnected Network (SWIN). These diagrams form the framework for both *consumer* and *network designers* when selecting an appropriate *consumer* supply and connection.

Each supply/connection arrangement and its supporting *network infrastructure* must be selected, designed and installed to ensure that:

- The integrity and safety of the *network* together with the *consumer's electrical installation* is not compromised;
- *Network* capacity limits are not exceeded;
- The *consumers load* and generation expectations are taken into consideration; and
- Other users of the surrounding *network* either directly or indirectly are not adversely affected or placed at risk.

Supply/connection arrangements may be either for a discrete *consumer* (e.g., a single residential, commercial or industrial connection) or an arrangement for multiple new *consumers* (e.g., multi- residential/commercial installations or *subdivision*).

5. Scope

5.1 In scope

These *requirements* are to be applied to all new, *altered* or modified supply and or connection arrangements to the SWIN at distribution *voltages* including both low *voltage* (LV) and high *voltage* (HV) up to and including 33 kV. The content is to be read in conjunction with but not limited to:

- Applicable Federal, State and Local Legislation, and Codes.
- Documents as published by Building and Energy (formerly Energy*Safety*) including:
  - Guidelines for the safe management of high voltage electrical installations;
  - Western Australian Electrical Requirements (WAER).
- Industry standards as published by Standards Australia including:
  - AS 2067: Substations and high voltage installations exceeding 1 kV a.c.;
  - AS/NZS 3000: Electrical installation - Wiring rules;
  - AS 4777 series.
- Documents as published by Western Power including:
  - Distribution construction standards handbook (DCSH);
  - Distribution design catalogue (DDC);
  - Distribution substation plant manual (DSPM)
  - Embedded generation (EG) technical requirements (Refer to WASIR clause 1.6);
  - Distribution overhead line design manual. (LDM) (Network only access)
  - Underground distribution schemes manual (UDS);
  - Technical rules;
  - Western Australian Service and installation requirements (WASIR).
- Other related *network* standards as outlined in this document which may specify minimum *requirements* for a *consumer* supply arrangement or connection.

In connecting a *consumer*, over and above compliance with the identified *technical* and *connection requirements/standards*, the designer of the *consumer's* connection arrangement shall demonstrate due diligence with safety in design principles as prescribed by Western Power and the Occupational Safety and Health (OS&H) legislation.

5.1.1 Section 8 drawings

This Section contains drawings showing standard arrangements for the connection of LV or HV *consumers* to the *network* and associated *distribution substation*. The intent of these drawings is to assist designers to select the correct supply arrangement and method for connection of the consumer.

5.1.2 Section 9 drawings

This Section contains drawings showing standard arrangements for the interconnection of a *distribution substation* with the HV *network*. As with Section 8' the intent of these drawings is to assist designers with the selection of the appropriate *substation* supply arrangement and connection methodology to the HV *network*.

5.2 Out of scope

It is intended that the DCCR will be progressively updated to cover other aspects of the connection relationship between the *distribution network* and the *consumer*. This edition of the *requirements*, does not currently include, but may in future, cover specific detail on *network requirements* associated with one or more of the following:

- Overhead connection and supply arrangements for both metropolitan and rural *networks*;
- Emergency response generation (ERG) connection arrangements;
- Private power generation (PPG) connection arrangements;
- Neutral voltage displacement (NVD) – LV connection arrangements;
- Single phase overhead and underground distribution connection arrangements.

6. Compliance with these requirements

It is the responsibility of the *consumer* to operate and maintain (or ensure their authorised representatives, operates and maintains) their *electrical installation and equipment* forming a part of their respective facilities in accordance with both regulatory and *network requirements*.

Western Power will not connect a non-compliant or, where aware, permit a non-compliant connection to remain connected to the *distribution network* until such time as that connection or *consumer's electrical installation* is rectified and made compliant by that *consumer*.

Re-inspection of the *consumer's electrical connection/installation* may be required for reasons of safety or non-compliance or both. In such cases a re-inspection fee may be applied.

7. Definitions

These *requirements* use standard industry terminology wherever possible to align the document's language with that used in legislation, frequently referenced industry and *network* publications. In addition to the documented Legends, common definitions and phrases have been drawn from the WASIR and where used, shown in italics.

In addition to the above where a word, phrase or abbreviation is shown in italics but not specifically referenced in the WASIR, the word, phrase or abbreviation shall have the same meaning as that referenced in the Embedded generation EG connection *technical requirements* (Refer to WASIR clause 1.6.2.)

8. Consumer connections

8.1 Auxiliary functionality of AMI for DER management

8.1.1 Introduction

Distributed Energy Resources (DER) management is the ability to control/*disconnect/reconnect* generated or stored energy from an *embedded generation EG system* via remote means.

The DER management functional *requirements* are detailed in the appropriate EG *technical requirement* documents that *users* shall refer to regarding design and installation of new EG system connections to Western Power's *distribution network*. DER management functional methods provide the basic *requirements* for the remote *disconnection/reconnection* of *EG systems*.

Where the DER management functional requirements are applicable to an installation the *user* may choose the auxiliary functionality of the AMI *meter* as a method. Where the AMI method is chosen then the requirements of this section apply (8.1).

A functional method permitted in the Basic *EG connection technical requirements,* is the use of Western Power's AMI *metering installation* configured and connected such that on receipt of a signal, the *network* AMI *meter* can *disconnect or reconnect* only the *EG system* from the *distribution network*.

This section provides permitted arrangements for the use of the *auxiliary functionality* of Western Power's *network* AMI *meters* for *EG system* control and monitoring.

The referenced connection arrangements are for EG *users* to implement, appropriate installation methods and arrangements such that on installation of an AMI *meter* with *auxiliary functionality,* the DER management function may be activated.

8.1.2 Control methods

8.1.2.1 General

The AMI *meter auxiliary functionality* may be used to provide *network* system management and for some *users* the DER management functionality.

Two methods of DER management are permitted with *network* AMI *meters*. The methods are:

i. **Direct control** – utilises the AMI internal *meter* auxiliary function terminal to directly *connect/disconnect* the *EG system* to/from the *network*; and

ii. **Indirect control** – utilises the AMI internal *meter* auxiliary function terminal to control an externally mounted *user* contactor suitable for single-phase or three-phase *EG systems*.

The installation arrangement selected for control of a EG system shall be determined by the *user* in accordance with the *network operator's* permitted arrangements. For:

a) Small single-phase *network* connection arrangements where there is only a single energy source *EG system* without a BESS, the AMI *meter* direct control method is the simplest management configuration;

b) Larger single and all three-phase *EG systems* with export control, the indirect control method is the appropriate option, where the export limiting device monitors the net *load* and generation at the main switch connection;

c) an EG system with BESS, the signal emanating from the *network* AMI *meter* auxiliary function terminal may cause the disconnection of non-BESS energy sources on the connection service or cease generation where the net outcome is the ceasing of export from the *user's* connection service.

As there are a variety of different BESS configurations, a number of which are covered by these *requirements* alternative system connection and control arrangements may be considered. Alternative arrangements will be subject to *network* review and approval based on the ability to perform the required DER management functionality and or control of all exported energy.

8.1.2.2 Main switch

Where required a main switch shall be installed with an additional pole for connection of the auxiliary function terminal of an AMI *meter*. The auxiliary function terminal may be used for either direct or indirect control of an EG system. The addition of the extra pole of the main switch does not increase the overall capacity of the connection service.

For a single-phase connection service, a 2-pole circuit breaker rated at the capacity of the connection service shall be used. Similarly, for a three-phase connection service a 4-pole circuit breaker rated at the capacity of the connection service *shall* be used.

For direct controlled single energy source EG systems the main switch *inverter supply* (MSIS) shall be a circuit breaker:

a) rated to the capacity of AMI auxiliary function terminal that is no more than 40A;
b) rated to grade with upstream main switch; and
c) rated to provide protection as per AS/NZS 3000 and AS/NZS 4777.1.

8.1.2.3 Exporting EG system control

Single-phase single energy source EG system without BESS

For a single energy source *EG system* it may be direct connected to the auxiliary function terminal of a *network* AMI *meter* via the extra pole on the main switch . DCCR 1-01-3 (Sheet 1 of 3) Ref note 1 provides a simplified single line diagram (SLD) for the permitted configuration.

The *network* AMI *meter* auxiliary function terminal cannot switch more than 40A, for a single-phase *standard connection service.* Note the maximum permitted *Basic EG system* connection is also limited to 5 kVA for a single energy source system.

For multi-phase systems larger than a *standard connection service*, and systems greater than 5 kVA that require net *load* and generation measurement for *export* limitation control, these *shall* not be connected via the direct control method. Refer to clause 8.1.2.4 for permitted options.

Where EG system net load and export monitoring is needed for a single-phase system then the indirect control method may be used.

For a single energy source *Basic EG system* that is less than 3kVA and is a single-phase IES on a three-phase connection service, this system can be direct connected to auxiliary function terminal of a *network* AMI *meter* via the extra pole on the main switch. DCCR 1-01-3 (Sheet 1 of 3) Ref note 2 provides a simplified single line diagram (SLD) for the permitted configuration.

Three-phase single energy source EG system without BESS

For single energy source EG systems that are multi-phase connected, these shall be indirect controlled using the auxiliary function terminal of the AMI *meter*. DCCR 1-01-3 (Sheet 1 of 3) Ref note 3 depicts an acceptable solution.

For the indirect control method, the output of the EG system is to be controlled by a suitably rated contactor installed on the *inverter energy system* (IES) side of the main switch *inverter supply* (MSIS).

The contactor shall be configured normally open and operated via a 240V AC control circuit from the AMI auxiliary function terminal to power, energise and hold the contactor in the closed position during normal operation.

8.1.2.4 Export limited EG System control

Single-phase EG systems

For single energy source EG systems that are single-phase connected and include an export limit device (**ELD**) that measures load consumption only, these may be directly controlled using the auxiliary function terminal of the AMI *meter*. DCCR 1-01-3 (Sheet 2 of 3) Ref note 4 shows a typical example of the simplified SLD for direct control of a single energy source *inverter* with an export limiting device measuring load consumption only (without a BESS).

Single energy source *EG system*s that are multi-phase connected with an export limit device (**ELD**) to measure net load, shall be indirectly controlled using the auxiliary function terminal of the AMI *meter*.

For indirectly controlled arrangements, the output of the *EG system* is to be controlled by a suitably rated contactor installed on the *inverter energy system (IES)* side of the main switch *inverter supply* (MSIS).

The contactor shall be configured normally open and operated via a 240V AC control circuit from the AMI auxiliary function terminal to power, energise and hold the contactor in the closed position during normal operation.

DCCR 1-01-3 (Sheet 2 of 3) Ref notes 5, 6 and (Sheet 3 of 3) Ref note 7 shows typical examples of the simplified SLD for indirect control of a single energy source *inverters* (which are not BESS).

Refer to the "Summary of options" clause 8.1.2.6 for application of indirect control methods for varying *EG system* configurations. Note: Export limiting devices shall be on the *inverter energy system (IES)* side of the *consumer's* main switch.

8.1.2.5 Systems with BESS

Where an *EG system* includes a BESS, indirect control of the non-BESS *inverter* may be used to fulfill the *requirements* for DER management. There are many different system configurations for *EG systems* with BESS and subsequently many possible arrangements for control using the *network* AMI auxiliary function terminal.

The DER management *requirement* may be achieved by either disconnection of the non-BESS *inverters* or *export limitation* to zero. For BESS the DER management *requirement* is to zero export. Where the BESS is used for export of energy the switching of the *network* AMI auxiliary function terminal shall prevent export from the BESS. DCCR 1-01-3 (Sheet 3 of 3) Ref note 8 provides an example where the non-BESS *inverter* is switched via the indirect method and the BESS *inverter* remains connected but not exporting energy.

Where an *EG system* that includes a BESS is capable of extended stand-alone operation (e.g., 4 hours) then DCCR 1-01-3 (Sheet 3 of 3) Ref note 9 shows a configuration that would be permitted. In the example, the *load* and the *EG system* with BESS are disconnected from the *network* using the indirect control method.

For *EG systems* with BESS that are used for partial backup/emergency *load* support then it is permissible to only disconnect the BESS and the *load* that is intended to be supplied and leave the other *load* connected to the *network*.

DCCR 1-01-3 (Sheet 3 of 3) Ref notes 8 & 9 can be adapted to suit many different configurations of *EG systems* with BESS either *AC coupled,* or *DC coupled*. These examples may also be adapted and used for single-phase configurations

In these diagrams not all components for the integration of the BESS are shown. Where a specific configuration is proposed for an *EG system* with a BESS that is different to the specific cases shown, proposed control arrangements will need to be approved on a case-by-case basis where the required basic functionality for DER management is achieved.

8.1.2.6 Summary of options

The following table provides an indication of different systems and configurations and whether the direct or indirect control method applies in each scenario. Control methods are based on the system configuration and size.

EG System	Single phase	Three-phase	Export limited	Direct control	Indirect control
<3kVA single phase	✓	✓	✗	✓	✗
< 5KVA Single-phase	✓	✗	✗	✓	✗
< 5KVA Single-phase (export limited)	✓	✗	✓	✓	✓
≤ 5 kVA three-phase *inverter*	✗	✓	✗	✗	✓
>5 kVA Three-phase *inverter*	✗	✓	✓	✗	✓
≤ 50 kVA Three-phase *inverter*	✗	✓	✓	✗	✓

Notes:

(1) ✓ indicates option is applicable, ✗ indicates option is not applicable

8.2 Arrangement drawings

8.2.1 Drawing index

DCCR Section 8	Title
General	
DCCR 1-00-1	Legend
DCCR 1-00-2	Transformer and LV feeder overhead fusing type EDO & FT
DCCR 1-00-3	Transformer and LV feeder ground mounted fusing type air HRC
DCCR 1-00-4	Isolation transformer overhead and RMU fusing type EDO, FT and air HRC
DCCR 1-00-5	Non MPS MKII Tyree transformer MCCB settings
DCCR 1-00-6	Non MPS MKII Etel transformer MCCB settings
DCCR 1-01-1	Un-metered supply arrangement ≤ 20A
DCCR 1-01-2	Whole current (direct connected) meter ≤ 100A supply arrangement
DCCR 1-01-3 sht 1	Whole current meter ≤ 100A supply arrangement. Inverter control
DCCR 1-01-3 sht 2	Whole current meter ≤ 100A supply arrangement. Inverter control with ELD
DCCR 1-01-3 sht 3	Whole current meter ≤ 100A supply arrangement. Inverter control with ELD&BESS
DCCR 1-01-3 sht 4	Whole current meter ≤ 100A supply arrangement. Remote inverter control
	Reserved for future content
DCCR 1-01-5	Typical CT meter >100A supply arrangement
DCCR1-01-N	Drawing notes to DCCR 1-01-1 to 1-01-5
	Reserved for future content
DCCR1-01-10	Strata connection supply arrangements - shts 1 to 3
DCCR1-01-10N	Drawing notes for DCCR 1-01-10 - shts 1 and 2
	Reserved for future content
LV district substations	
DCCR 1-05-1 sht 1	MPS LV loads below 315 A - Shared LV circuits
DCCR 1-05-1 sht 2	100 kW Community power bank connection (Unmetered)
DCCR 1-05-1 sht 3	100 kW Community power bank connection (Network metered)
DCCR 1-05-1N	Drawing notes for DCCR 1-05-1
DCCR 1-05-2	MPS LV loads up to 315 A - Dedicated LV circuit
DCCR 1-05-3	Non MPS LV loads up to 1000 A - Dedicated LV circuit
DCCR 1-05-4	Non MPS LV loads up to 1000 A - Dedicated LV circuit
DCCR 1-05-5	Non MPS LV loads up to 1400 A - Dedicated LV circuit
DCCR 1-05-6 sht 1	SPS AC coupled system with changeover switch
DCCR 1-05-6 sht 2	SPS DC coupled system with changeover switch
DCCR 1-05-6 sht 3	SPS AC coupled system
DCCR 1-05-6 sht 4	SPS DC coupled system
DCCR 1-05-N	Drawing notes for DCCR 1-05-2 to 1-05-6
	Reserved for future content

LV sole use substations	
DCCR 1-06-1	Reserved for future content
DCCR 1-06-2	LV load up to 82 A 3Ø - Underground - Dedicated transformer
DCCR 1-06-3	LV load up to 1310 A 3Ø - Underground - Dedicated transformer
DCCR 1-06-4	LV load up to 2500 A 3Ø - Underground - Dedicated transformers
DCCR 1-06-5	LV load up to 5000 A 3Ø - Underground - Dedicated transformers
DCCR 1-06-N	Drawing notes for DCCR 1-06-2 to 1-06-5
	Reserved for future content
HV consumer owned substations	
DCCR 1-07-1a	HV metering - Overhead pole mounted outdoor
DCCR 1-07-1b	HV metering - Ground mounted outdoor
DCCR 1-07-2	HV metering - Ground mounted outdoor
DCCR 1-07-3 sht 1	HV metering - Ground mounted indoor (Cable connected)
DCCR 1-07-3 sht 2	HV metering - Ground mounted indoor (Unit upgrade - Interim cable connection)
DCCR 1-07-3 sht 3	HV metering - Ground mounted indoor CBD switchroom layout - Option A
DCCR 1-07-3 sht 4	HV metering - Ground mounted indoor CBD switchroom layout - Option B
DCCR 1-07-4	HV metering - Ground mounted indoor – (with generation)
DCCR 1-07-5	HV metering - Ground mounted indoor – (with generation) - (alternative)
DCCR 1-07-N	Drawing notes for DCCR 1-07-1 to 1-07-5
DCCR 1-08	Reserved for future content

8.2.2 Drawing revision list

DSM Section 1	DCCR Section 8	Title
General		
DSM 1-01 sht 1 of 1	DCCR 1-00-1	Legend
DSM 1-02 sht 1 of 3	DCCR 1-00-2	Transformer and LV feeder overhead fusing type EDO & FT
DSM 1-02 sht 2 of 3	DCCR 1-00-3	Transformer and LV feeder ground mounted fusing type & air HRC
DSM 1-02 sht 3 of 3	DCCR 1-00-4	Transformer Overhead and RMU fusing type EDO, FT and air HRC
NA	DCCR 1-00-5	Non MPS MKII Tyree transformer MCCB settings
NA	DCCR 1-00-6	Non MPS MKII Etel transformer MCCB settings
NA	DCCR 1-01-1	Un-metered supply arrangement
NA	DCCR 1-01-2	Whole current (direct connected) meter≤ 100A supply arrangement
NA	DCCR 1-01-3	Reserved for future content Inverter direct/indirect control
NA	DCCR 1-01-5	Typical CT meter >100A supply arrangement
NA	DCCR 1-01-N	Drawing notes for 1-01-1 to 1-01-5
NA	DCCR 1-01-10	Shts 1 to 3 Strata connection - Multiple master meter arrangement
NA	DCCR 1-01-10N	Drawing notes for shts 1 & 2 to 1-01-10
LV district substations		
DSM 1-03 sht 1 of 2	DCCR 1-05-1	LV loads below 315 A - Shared LV street circuits
NA	DCCR 1-05-1	100 kW community power bank connection (Unmetered)
NA	DCCR 1-05-1	100 kW community power bank connection (Network metered)
DSM 1-03 sht 2 of 2	DCCR 1-05-1N	Drawing notes for DCCR 1-05-1
DSM 1-04 sht 1 of 2	DCCR 1-05-2	MPS LV loads up to 315 A - Dedicated LV street circuit
DSM 1-04 sht 2 of 2	DCCR 1-05-3	MPS LV loads up to 1000630 A - Dedicated LV street circuit
DSM 1-05 sht 1 of 1	DCCR 1-05-4	Non MPS LV loads up to 1000 A - Dedicated LV street circuit
DSM 1-06 sht 1 of 1	DCCR 1-05-5	Non MPS LV loads up to 1400 A - Dedicated LV street circuit
NA	DCCR 1-05-6	Sht 1 - SPS AC coupled system with changeover switch
NA	DCCR 1-05-6	sht 2 - SPS DC coupled system with changeover switch
NA	DCCR 1-05-6	sht 3 - SPS AC coupled system
NA	DCCR 1-05-6	sht 4 - SPS DC coupled system
NA	DCCR 1-05-N	Drawing notes for DCCR 1-05-2 to 1-05-6
LV sole use substations		
DSM 1-07 sht 1 of 1	DCCR 1-06-2	LV load up to 82 A 3Ø - Underground - Dedicated transformer
	DCCR 1-06-3	LV load up to 1310 A 3Ø - Underground - Dedicated transformer
DSM 1-08 sht 1 of 1	DCCR 1-06-4	LV load up to 2500 A 3Ø - Underground - Dedicated transformers
DSM 1-09 sht 1 of 1	DCCR 1-06-5	LV load up to 5000 A 3Ø - Underground - Dedicated transformers
NA	DCCR 1-06-N	Drawing notes to DCCR 1-06-2 to 1-06-5

HV consumer owned substations		
DSM 1-10 sht 1 of 6	DCCR 1-07-1 a	HV metering - Overhead pole mounted outdoor
	DCCR 1-07-1 b	HV metering - Ground mounted outdoor
DSM 1-10 sht 2 of 6	DCCR 1-07-2	HV metering - Ground mounted outdoor
DSM 1-10 sht 3 of 6	Withdrawn	NA
DSM 1-10 sht 4 of 6	DCCR 1-07-3	Sht 1 - HV metering - Ground mounted Indoor cable connected
NA	DCCR 1-07-3	Sht 2 HV metering - Ground mounted indoor (Unit upgrade - Interim cable connection)
NA	DCCR 1-07-3	Sht 3 HV metering - Ground mounted indoor CBD switchroom layout - Option A
NA	DCCR 1-07-3	Sht 4 HV metering - Ground mounted indoor CBD switchroom layout - Option B
DSM 1-10 sht 5 of 6	DCCR 1-07-4	HV metering - Ground Mounted Indoor – (with generation)
DSM 1-10 sht 6 of 6	DCCR 1-07-5	HV metering - Ground Mounted Indoor – (with generation) - (alternative arrangement)
NA	DCCR 1-07-N	Drawing notes to DCCR 1-07-1 to 1-07-5

8.2.3 Drawing legend

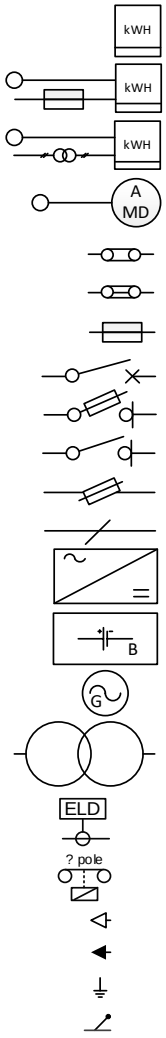

Whole current (direct connected) meter (non CT)

LV current transformer meter (LV CT)

HV current transformer metering unit (HV CT)

Maximum demand meter

Links (removable)

Connection block

Fuse

Circuit breaker (CB)

Combination fuse switch

LV links or HV / LV load disconnector

Drop out fuse (DOF)

Pole top switch

Inverter - IES

Battery

Generator

Transformer (Tx)

Export limiting device

? Pole contactor

Cable termination to network assets including switchgear & transformers

Cable termination to overhead network

Earth connection

Neutral conductor

BESS	Battery energy storage system	IES	Inverter energy system
CB	Circuit breaker	MPD	Meter protection device (Meter fuse)
CFS	Combination fuse / switch	MCB	Mains connection box
CP	Connection point	MPS	Modular package substation
CMS	Consumer main switch	MSB	Main switchboard
CPS	Consumer paralleling switch	MS	Main switch
CPR	Consumer protection relay	MSIS	Main switch inverter system
CT	Current transformer	MTG	Maximum total generation
DB	Consumer distribution board	MTL	Maximum total load
LU xx	Distribution design catalogue reference	NOP	Normally open point
ELD	Export limiting device	PoS	Point of supply (connection)
FSD	Fuse switch disconnect	PCC	Point of common coupling
GMS	Generator main switch	SMSB	Site main switch board
HV	High voltage	SPD	Service protection device

Drawings to be read in conjunction with applicable legislation, industry standards, codes, the WAER and WASIR

westernpower Distribution customer connection requirements EDM Visio 499 01 284	Legend	Date # Oct 2021 Rev # Three Sheet # 1 of 1 Draw # DCCR 1-00-1

8.2.4 Fuse charts

Overhead Fusing				
Transformer		Expulsion Dropout	Fault Tamer Standard Speed	LV HRC fuse
Voltage	Size (kVA)	EDO Fuselink Rating (A)	FT Fuselink Rating (A)	LV Max Fuse Rating (A)
6.6 kV	10	3.15	3	-
	25	5	5	-
	50	10	7	-
	63	10	10	-
	100	16	15	-
	160	31.5	20	200
	200	31.5	-	-
	300	40	-	-
	315	40	-	315
	500	63	-	315
	630	80[3]	-	400
	1000	-	-	-
11 kV	10	3.15	3	-
	25	3.15	3	-
	50	5	5	-
	63	5	5	-
	100	10	10	-
	160	25	15	200
	200	25	20	-
	300	25	-	-
	315	25	-	315
	500	40	-	315
	630	63	-	400
	1000	80[3]	-	400
22 kV Including 12.7 kV	10	3.15	3	-
	25	3.15	3	-
	50	3.15	3	-
	63	3.15	3	-
	100	5	5	-
	160	10	10	200
	200	10	10	-
	300	16	15	-
	315	16	15	315
	500	25	-	315
	630	31.5	-	400
	1000	40	-	400
33 kV Including 19.1 kV	10	3.15	-	-
	25	3.15	-	-
	50	3.15	-	-
	63	3.15	-	-
	100	5	-	-
	160	8	-	200
	200	8	-	-
	300	10	-	-
	315	10	-	315
	500	16	-	315
	630	25	-	400
	1000	31.5	-	400

For Historical Proposes Only	
Fuse Rating Cross Reference	
EDO Fuse Rating (A)	SMU – 20 Fuse (A)
3.15	3
5	5E. Std
8	8
10	10
16	15
25	25
31.5	30
40	40
63	65
80	80
Note 5A SMU-20 fuse is an "E" rated fuse not "K" to match 5K characteristic of 5A EDO fuse.	

Note Reference only.

For specific detail refer to network technical requirements.

westernpower Distribution customer connection requirements EDM Visio 499 01 284	Transformer and LV feeder overhead fusing type EDO & FT Fuse chart	Date # Aug 2018 Rev # Initial Sheet # 1 of 5 Draw # DCCR 1-00-2

Ground Mounted HV Ring Main Unit Air HRC Fuses (Din 43625)			
Transformer		Fuse	
Voltage	Size (kVA)	HV Fuse Rating (A)	LV Max Fuse Rating (A)
6.6 kV	100	31.5	-
	160	31.5	200
	200	31.5	-
	315	50	315
	500	80	400
	630	100	400
	1000	160	400
11 kV	160	25	200
	200	25	-
	315	31.5	315
	500	40	400
	630	50	400
	1000	80	400
22 kV	63[7]	10	-
	100	10	-
	160	10	-
	200	10	200
	315	16	-
	500	25	400
	630	31.5	400
	1000	40	400
	1500	80	-
33 kV	63	6.3	-
	160	6.3	-
	315	16	-
	500	20	-
	630	20	-
	100	40	-

Historical Reference Only			
Oil HRC Fuses			
Transformer		Fuse	
Voltage	Size (kVA)	HV Fuse Rating (A)	LV Max Fuse Rating (A)
6.6 kV	315	50	315
	500	80	400
	630	100	400
	1000	140	400
11 kV	315	40	315
	500	63	400
	630	63	400
	1000	90	400
22 kV	315	16	315
	500	25	400
	630	31.5	400
	1000	40	400
33 kV	315	-	-
	500	-	-
	630	-	-
	1000	-	-

Historical Reference Only				
HV Dropout and Ring Main Unit Air HRC Fuses				
Transformer Voltage	6 kV	11 kV	22 kV	33 kV
Transformer Size kVA	HV Fuse Rating (A)	HV Fuse Rating (A)	HV Fuse Rating (A)	HV Fuse Rating (A)
2 X 630	Not applicable	160 [4/6]	63	-
2 X 500		80	40	31.5
2 X 315		540	25	16
1 X 315 + 1 X 630		80	40	-
1 X 315 + 1 X 500		63	31.5	25
1 X 500 + 1 X 630		160 [4/6]	63	-

Notes -

For reference only. For specific detail refer to network technical requirements.

1. HV fuse sizes are the minimum required to ensure non operation of fuses for transformer energisation etc.
2. LV fuse sizes are the maximum which can be used for LV circuits to ensure grading with the transformer HV fuse. Smaller LV may be used.
3. Where 80A dropout fuses are to be used (eg 630kVA Tx at 6.6kV or 1MVA Tx at 11kV) use K-mate current limiter in series.
4. Dropout fuses are not suitable for 1MVA Tx at 6.6kV. A fuseswitch unit must be used.
5. Piggybacking of transformers is not permissible.
6. Low loss fuses with a rating of 3/7.2 kV are to be used at 6kV to alleviate thermal compatibility problems between switchgear and fuses.
7. Applies to single or string of up to five 22kV, 63kVA 3ph transformers

westernpower Distribution customer connection requirements EDM Visio 499 01 284	Transformer and LV feeder ground mounted fusing type air HRC Fuse chart	Date # Aug 2018 Rev # Initial Sheet # 2 of 5 Draw # DCCR 1-00-3

Overhead Fusing – Isolation Transformer Source Side Fusing				
Transformer Size kVA	**Source Side Voltage (kV)**	**Load Side Voltage (kV)**	**Expulsion Drop Out Fuse (A)**	**Fault Tamer (A)**
50	19.1	12.7	3.15	-
63	19.1	12.7	5	-
63	22	12.7	5	5
200	22	12.7	16	15
200	33	12.7	16	-
200	33	19.1	16	-
315	22	12.7	25	

Ring Main Unit Fusing – Isolation Transformer Source Side Fusing			
Transformer Size kVA	**Source Side Voltage (kV)**	**Load Side Voltage (kV)**	**Expulsion Drop Out Fuse (A)**
50	19.1	12.7	3.15
63	19.1	12.7	5
63	22	12.7	5
200	22	12.7	16
200	33	12.7	16
200	33	19.1	16
315	22	12.7	25

Note Reference only. For specific detail refer to network technical requirements.

westernpower Distribution customer connection requirements EDM Visio 499 01 284	Isolation transformer overhead and RMU fusing type EDO, FT and air HRC Fuse chart	Date # Aug 2018 Rev # Initial Sheet # 3 of 5 Draw # DCCR 1-00-4

Transformer size: - 630 kVA
Model: Terasaki XS1600NE
Transformer configuration - Single district and sole use only.
(For parallel 630kVA arrangement, use ETEL NMPS)

Adjustable settings		
IR	Characteristics	GF
0.8	2	Off
1280 A		
1	2	3

Example of setting locations

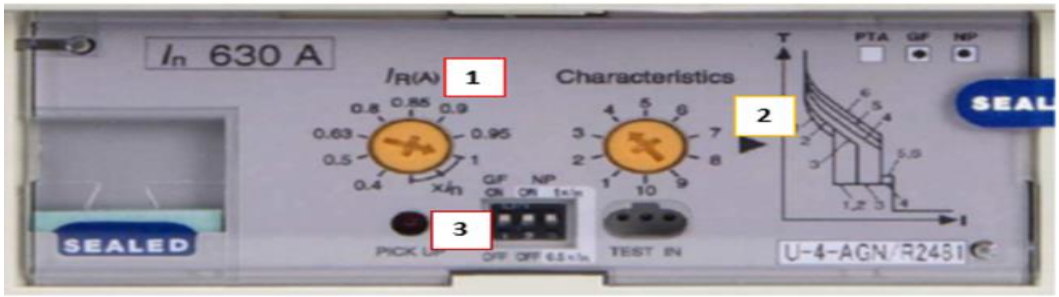

Transformer size: - 1000 kVA
Model: Terasaki XS2500NE
Transformer configuration - Single district only
Single and parallel sole use only

Adjustable settings								
Io	I1	T1	I2	T2	Ramp	I3	Ig	Tg
0.8	0.8	25 sec	2	0.3 sec	Off	6	0.4	0.3 sec
2000 A	1600 A		4000 A			12000 A	1000 A	
1	2	3	4	5	6	7	8	9

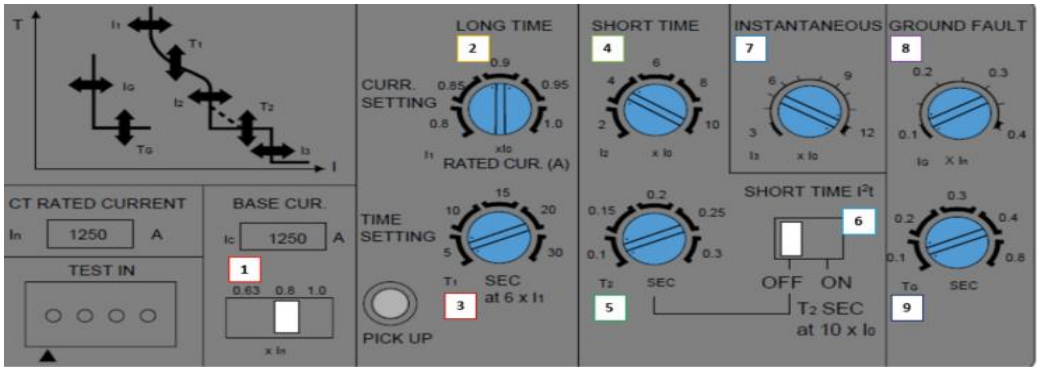

Transformer size: - 1000 kVA
Model: Terasaki XS2500NE
Transformer configuration - Parallel district only

Adjustable settings								
Io	I1	T1	I2	T2	Ramp	I3	Ig	Tg
0.8	1	15 sec	2	0.3 sec	On	5.7	0.4	0.3 sec
2000 A	2000 A		4000 A			11400 A	1000 A	

Refer to Engineering and Design for specific detail and technical advice.

westernpower Distribution customer connection requirements EDM Visio 499 01 284	Non MPS MKII Tyree transformer MCCB settings	Date # June 2022 Rev # First Sheet # 4 of 5 Draw # DCCR 1-00-5

Transformer size: - 630 kVA
Model: Schneider NS1600bN
Transformer configuration - Single and parallel district and sole use

Adjustable settings								
IR	TR	Isd	Tsd	Ramp	Ii	Ig	Tg	Rating Plug
0.8	12 sec	3	0.4	Off	6	0.75(j)	Off	Standard
1280 A		3840 A			9600 A	1200 A	0.3 sec	

Transformer size: - 1000 kVA
Model: Schneider NS2500N
Transformer configuration - Single district only
Single and parallel sole use only

Adjustable settings								
IR	TR	Isd	Tsd	Ramp	Ii	Ig	Tg	Rating Plug
0.6	20 sec	4	0.4	Off	4	0.45(j)	Off	Standard
1500 A		6000 A			10000 A	1200 A	0.3 sec	

Transformer size: - 1000 kVA
Model: Schneider NS2500N
Transformer configuration - Parallel district only

Adjustable settings								
IR	TR	Isd	Tsd	Ramp	Ii	Ig	Tg	Rating Plug
0.7	16 sec	4	0.4	Off	4	0.48(j)	Off	Standard
1750 A		7000 A			10000 A	1200 A	0.3 sec	
1	2	3	4	5	6	7	8	9

Example of setting locations

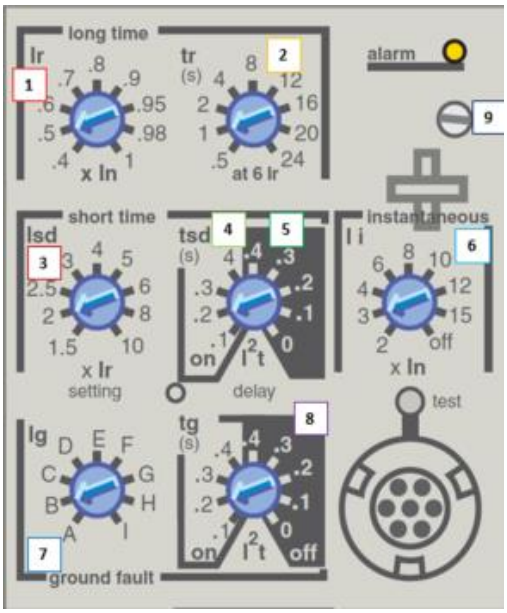

Refer to Engineering and Design for specific detail and technical advice

westernpower Distribution customer connection requirements EDM Visio 499 01 284	Non MPS MKII Etel transformer MCCB settings	Date # Apl 2021 Rev # Initial Sheet # 5 of 5 Draw # DCCR 1-00-6

8.2.5 LV connections

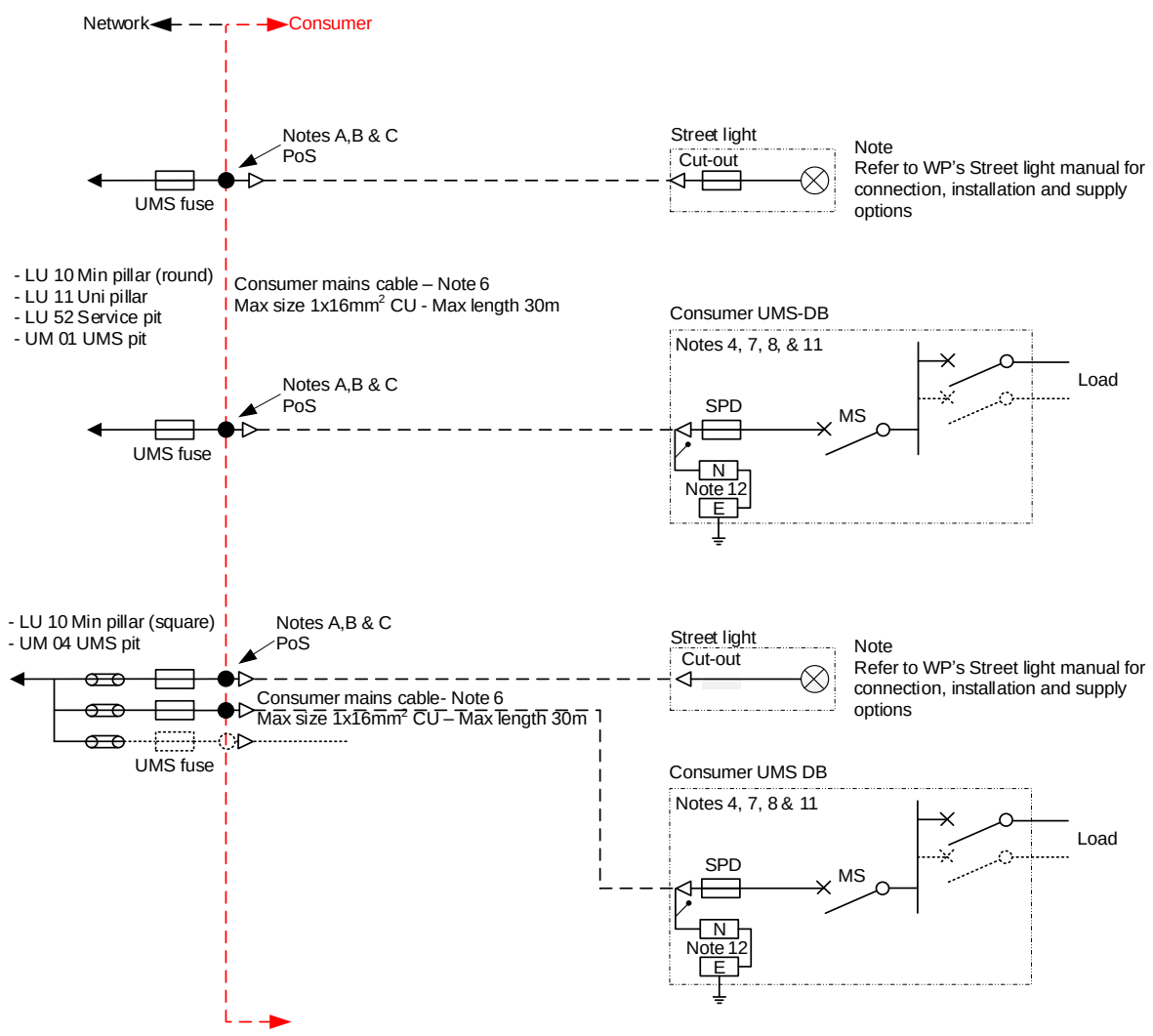

Notes - Refer to DCCR 1-01-N

a). Connection to be in accordance with Unmetered supply network standard
b). MTL ≤ 20A (4.8 kW) total load at the point of supply(connection)
c). MTG (hosting capacity) not permitted

westernpower Distribution customer connection requirements	Un-metered supply arrangement ≤ 20A Consumer connection pillar or pit	Date # Sept 2020
		Rev # Initial
		Sheet # 1 of 1
EDM Visio 499 01 284		Draw # DCCR 1-01-1

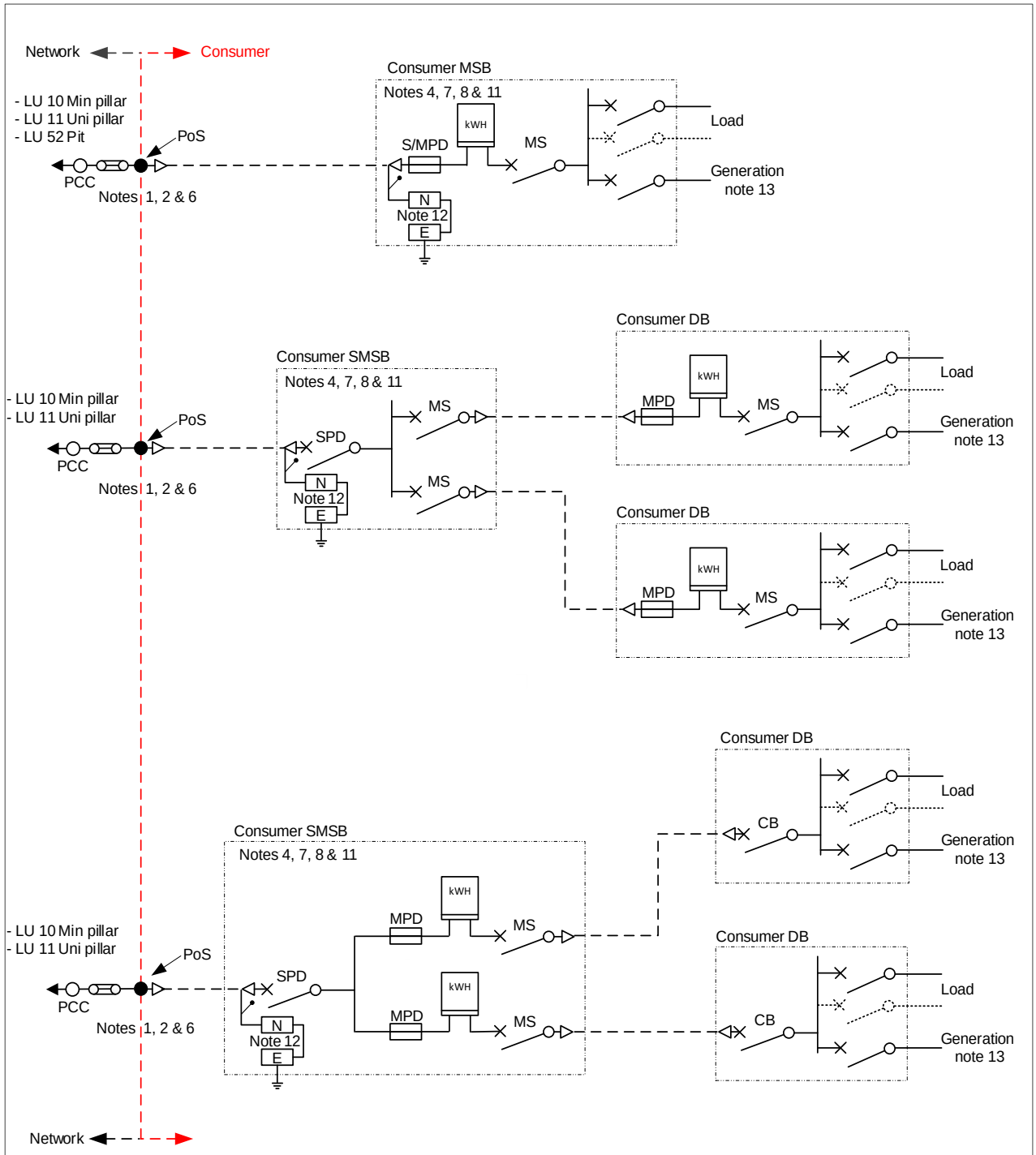

Notes - Refer to DCCR 1-01-N

MTL: ≤ 125A Per phase at the point of common coupling for a LU 34 or LU 10
≤ 200A Per phase at the point of common coupling for a LU 11 or LU35

MTG Hosting capacity as prescribed by EG technical requirements at the point of common coupling. Note 13.

westernpower Distribution customer connection requirements	Whole current meter ≤ 100A supply arrangement Consumer connection pillar, pit or wall box	Date # Oct 2021 Rev # One Sheet # 1 of 1
EDM Visio 499 01 284		Draw # DCCR 1-01-2

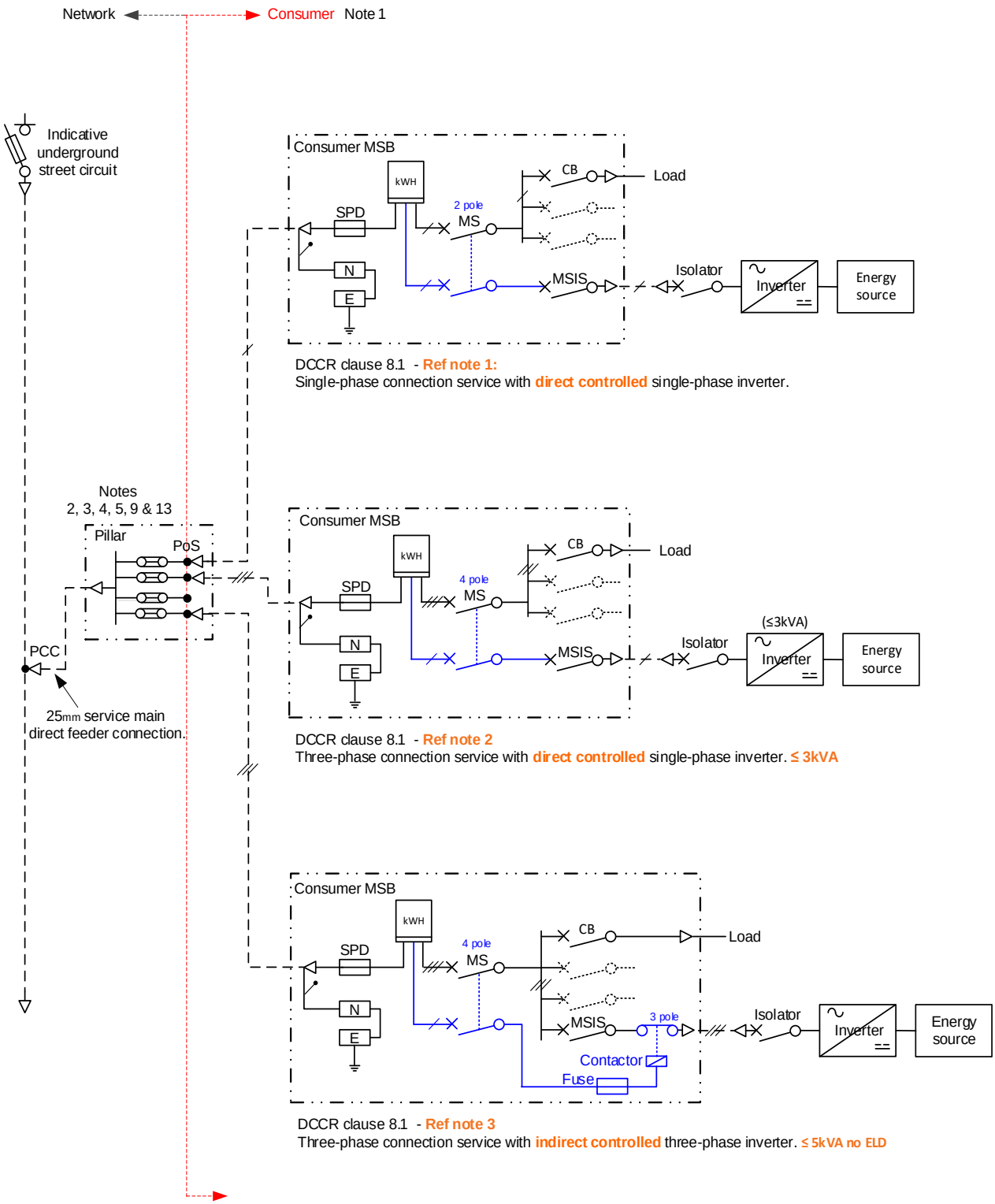

Refer to drawing notes DCCR 1-01-N

westernpower Distribution customer connection requirements	Whole current meters ≤ 100A DER connection arrangement for Basic embedded generation (EG) systems	Date # Dec 2021
		Rev # Initial
		Sheet # 1 of 4
EDM Visio 499 01 284		Draw # DCCR 1-01-3

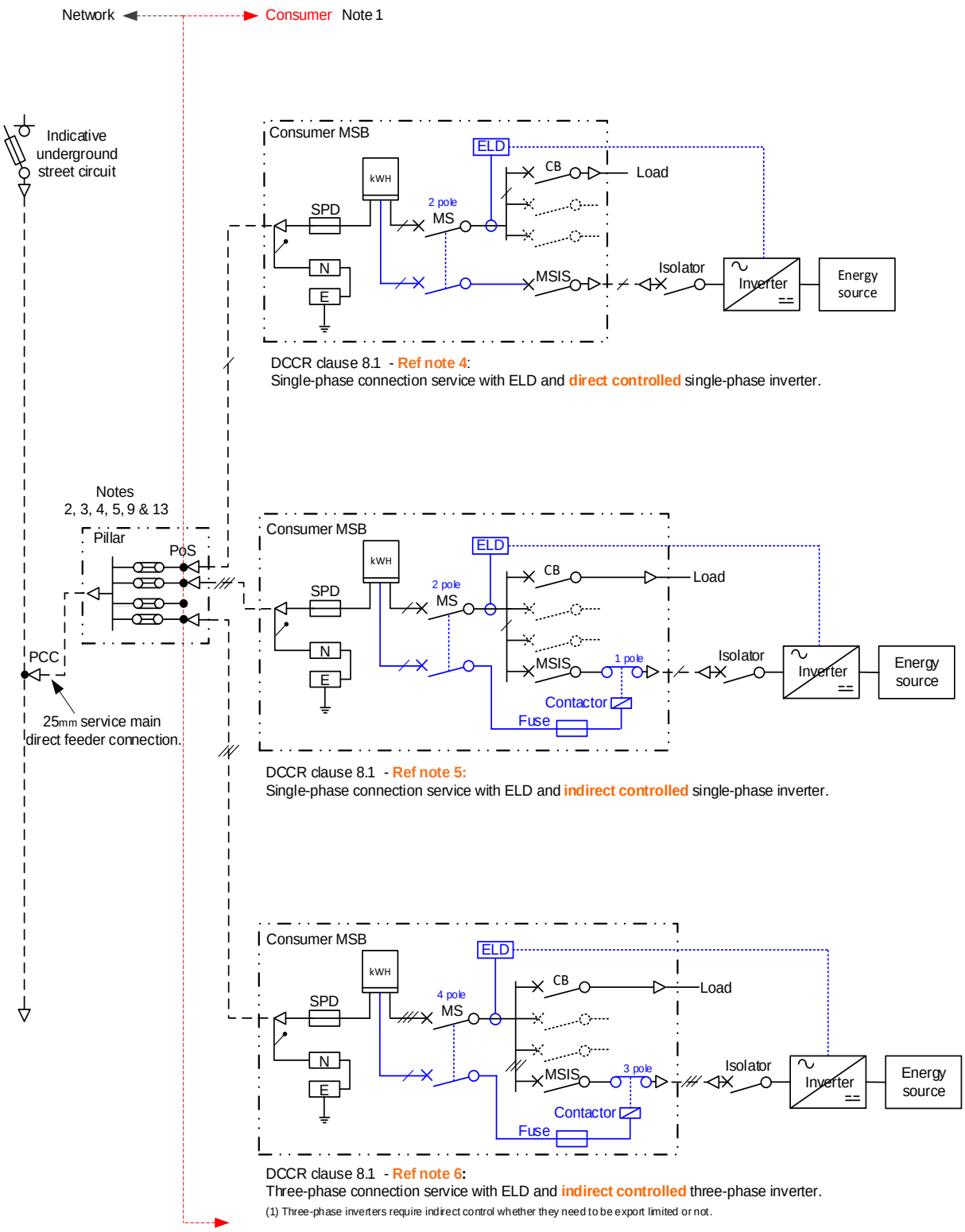

Refer to drawing notes DCCR 1-01-N

westernpower Distribution customer connection requirements	Whole current meters ≤ 100A DER connection arrangement for Basic embedded generation (EG) systems	Date # Dec 2021
		Rev # Initial
		Sheet # 2 of 4
EDM Visio 499 01 284		Draw # DCCR 1-01-3

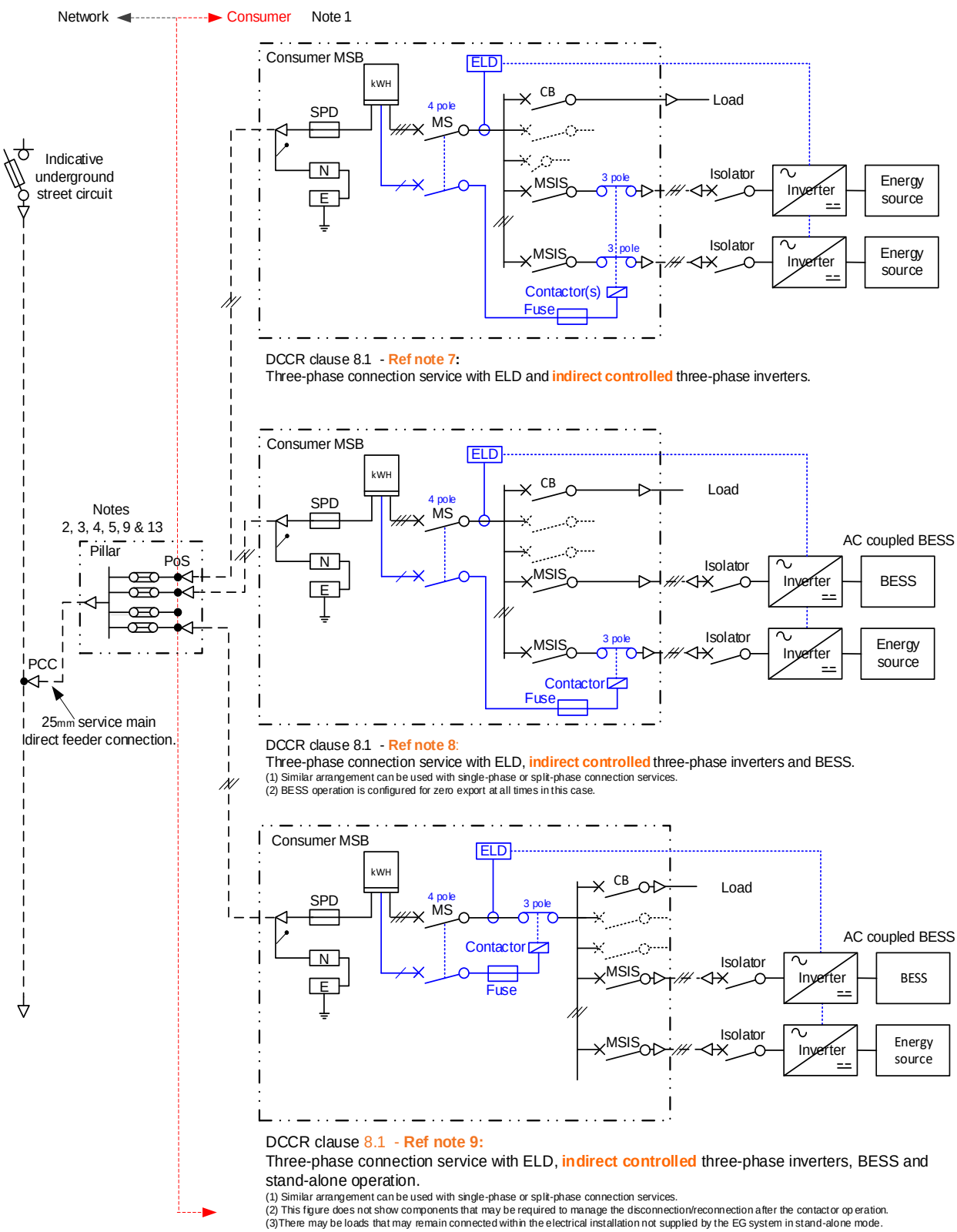

Refer to drawing notes DCCR 1-01-N

westernpower Distribution customer connection requirements	Whole current meters ≤ 100A DER connection arrangement for Basic embedded generation (EG) systems	Date # Dec 2021
		Rev # Initial
		Sheet # 3 of 4
EDM Visio 499 01 284		Draw # DCCR 1-01-3

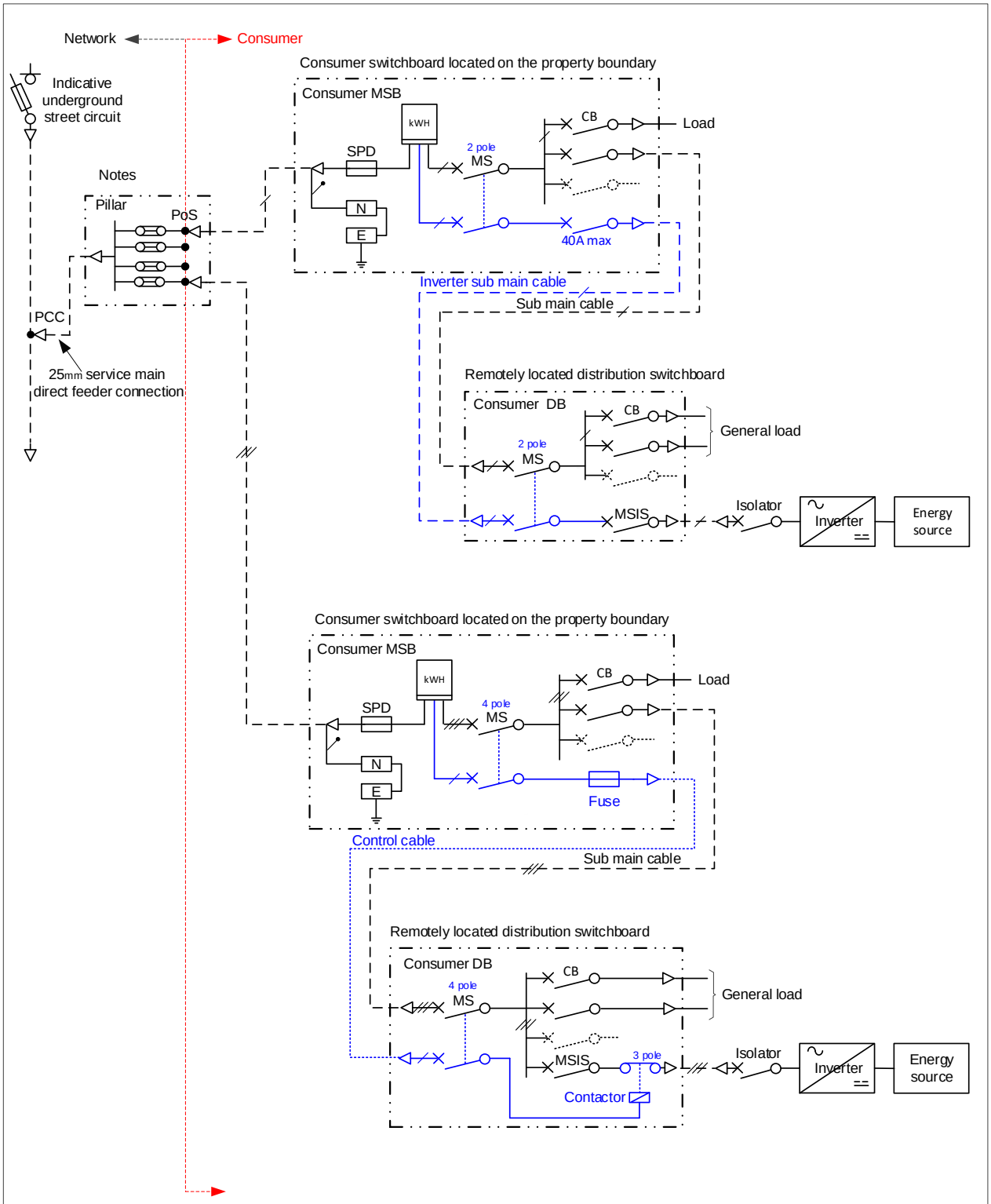

Refer to drawing notes DCCR 1-01-N

westernpower Distribution customer connection requirements	Whole current meters ≤ 100A DER connection arrangement for Remote basic embedded generation (EG) system	Date # Mar 2022
		Rev # Initial
		Sheet # 4 of 4
EDM Visio 499 01 284		Draw # DCCR 1-01-3

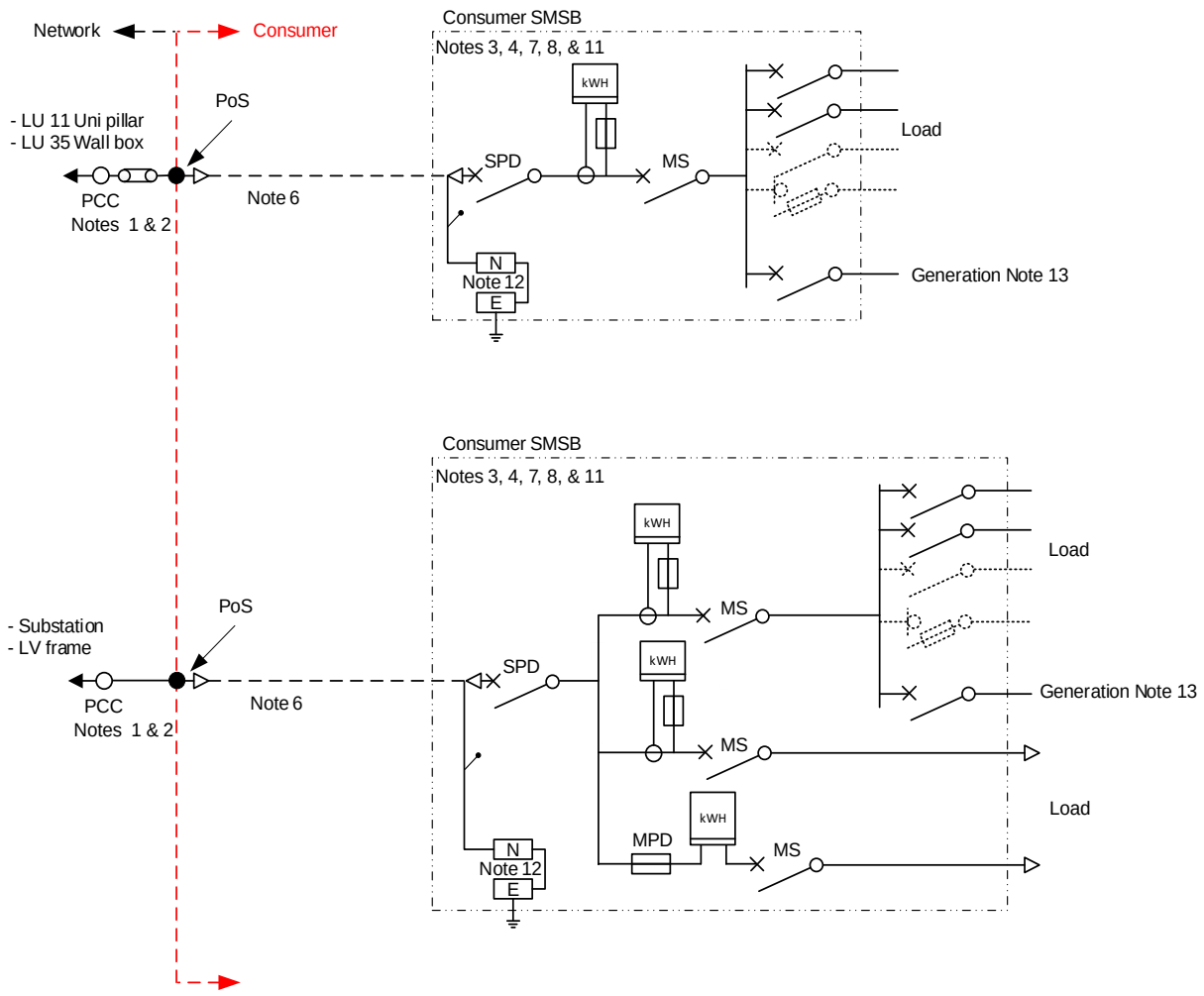

Notes - Refer to DCCR 1-01-N

Maximum: one (1) connection to a LU 11, LU 35, or kiosk/frame via a substation

MTL: ≤ 200A Per phase at the point of common coupling for a LU 11 / LU35
> 200A Per phase at the point of common coupling for substations

MTG Hosting capacity as prescribed by EG technical requirements at the point of common coupling. Note 13

westernpower Distribution customer connection requirements	Typical CT meter >100A supply arrangement Consumer connection pillar, wall box or LV frame	Date # Sept 2020
		Rev # Initial
		Sheet # 1 of 1
EDM Visio 499 01 284		Draw # DCCR 1-01-5

DCCR 1-01-Notes

1. The consumer's point of supply(connection) (POS) shall be:
   a) Pillar, pit or wall box; or
   b) For connections to transformers rated up to 25kVA the:
      I. Consumer's MCB for an overhead service supply;
      II. Terminals within the pillar for an overhead to underground supply (including 2 X 25 kVA);
      III. Transformer fuse where direct connected; or:
   c) The bar system for connections to transformers rated at 63kVA; or
   d) The LV terminals for connections to a district LV frame or kiosk; or
   e) The transformer terminals for connections to a sole use transformer rated above 63kVA and up to 1MVA.
2. Refer to the supply arrangement drawings Section 9 for details relating to connections to the distribution network:

Note:

a) Maximum # of standard connection service shall not exceed
   I. two (2) to a shared LU10 pillar;
   II. two (2) to a LU52 pit:
   with total load not exceed the rating of the service cable;
b) Each consumer is defined as a connection regardless of whether the connection is direct or via a MSB;
c) In determining the number of connections, all connections to or from adjacent lots (dwellings) shall be included;
d) Where any individual consumer mains cable exceeds 30m all new and existing connections within the development/lot shall originate from the site main switch board
e) Pit connections are subject to prior approval.

3. CT LV metering is required for >100A. Loads ≤100A shall be whole current metered.
   Note: Network metering shall be in accordance with the Metering Code 2012 and the WASIR.
4. SPD denotes service protection device. The device shall grade with the upstream network protection and be in accordance with network requirements
5. Network LV overhead service cable maximum size/length to be in accordance with the WASIR and OHLDM.
6. Consumer mains cable to be in accordance with AS/NZS 3000, WAER and WASIR.
   Note: Network upstream LV protection is required for legacy consumer main cables where triple insulation cannot be confirmed.
7. Main switches (MS) for new, altered or augmented supply arrangement to be in accordance with WASIR network requirements.
8. The installation may have more than one main switch as per WAER, WASIR, AS/NZS 3000, and AS/NZS 4777.
9. MTL at the PoS shall not exceed the rating of MS.
10. MTG (hosting capacity) shall be in accordance with Western Power's embedded generation (EG) technical requirements at the point of common coupling.
11. Consumer protection devices shown for illustration purposes only.
12. Earthing arrangements shown for illustration purposes only. Installation to be in accordance with WAER, AS/NZS 3000 and the WASIR.
13. Refer to Western Power's embedded generation (EG) technical requirements for additional capacity, connection and control detail.

westernpower Distribution customer connection requirements	Drawing notes for 1-01-1 to 1-01-5	Date # Sept 2020
		Rev # Initial
		Sheet # 1 of 1
EDM Visio 499 01 284		Draw # DCCR 1-01-N

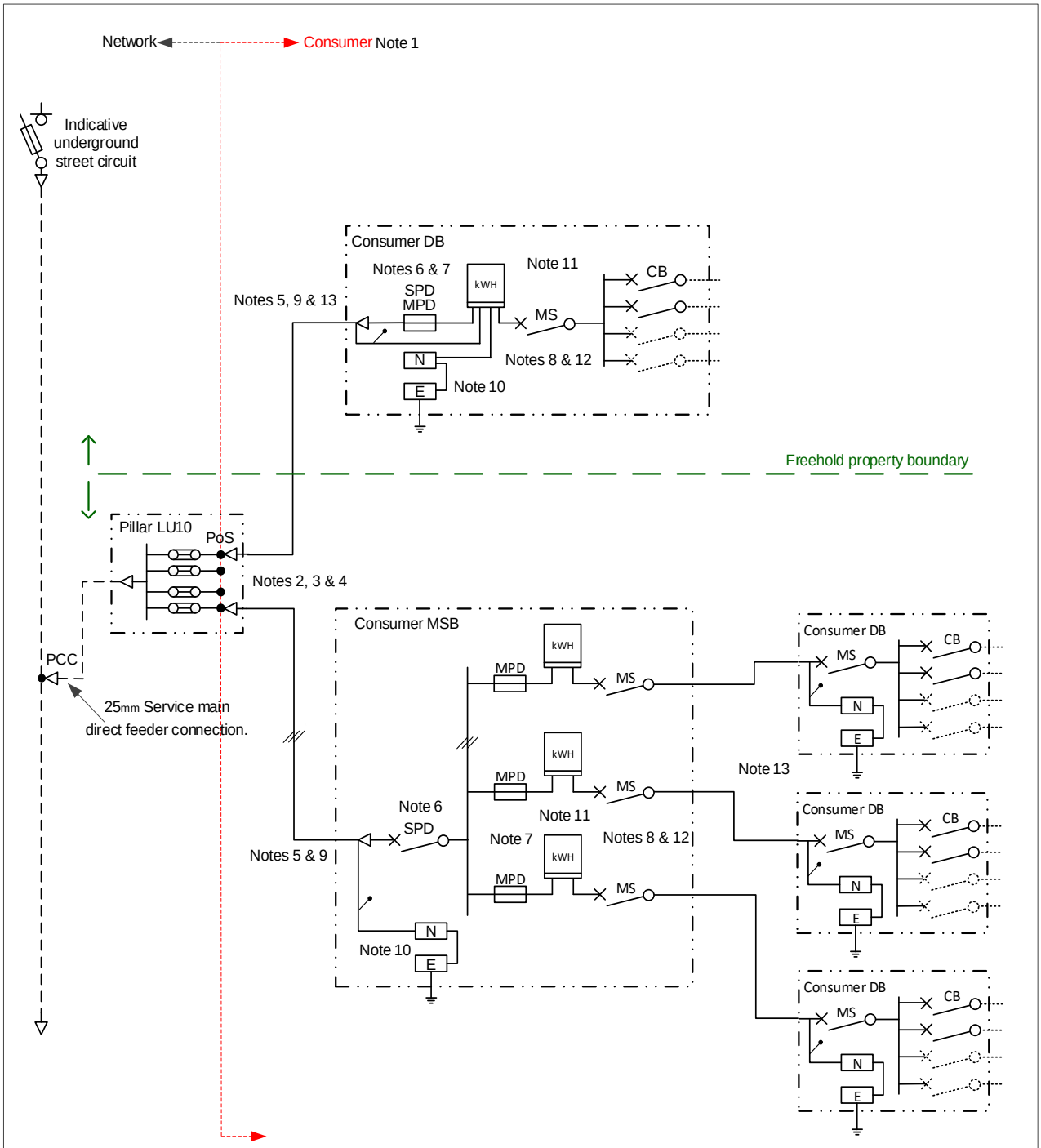

Drawings to be read in conjunction with DCCR 1-01-10 Notes

westernpower Distribution customer connection requirements	Strata connection supply arrangements Multiple master meter arrangement	Date # Aug 2021
		Rev # One
		Sheet # 1 of 3
EDM Visio 499 01 284		Draw # DCCR 1-01-10

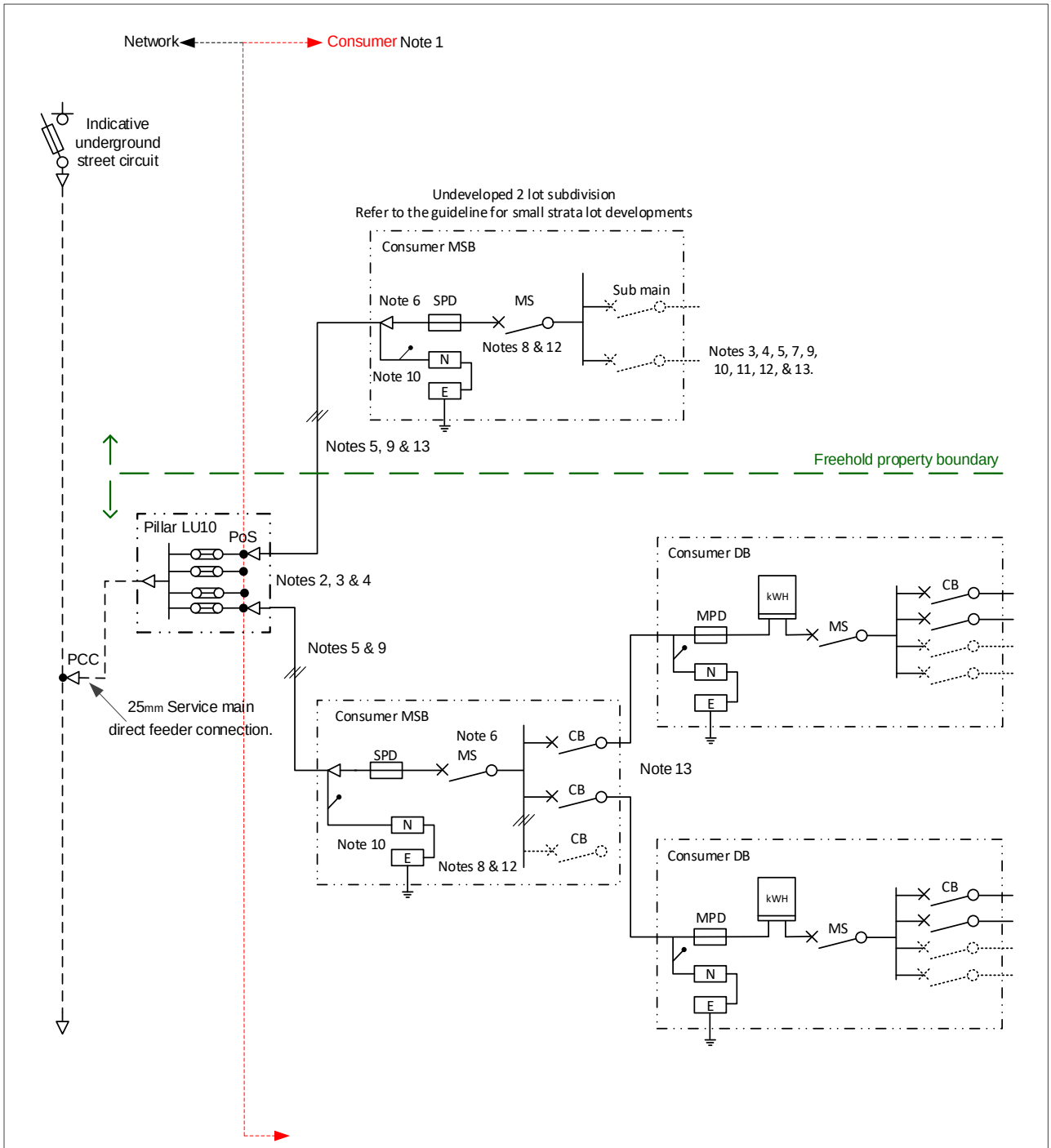

Drawings to be read in conjunction with DCCR 1-01-10 Notes

westernpower Distribution customer connection requirements	Strata connection supply arrangements Distributed master meter arrangement	Date # Oct 2021 Rev # Two Sheet # 2 of 3
EDM Visio 499 01 284		Draw # DCCR 1-01-10

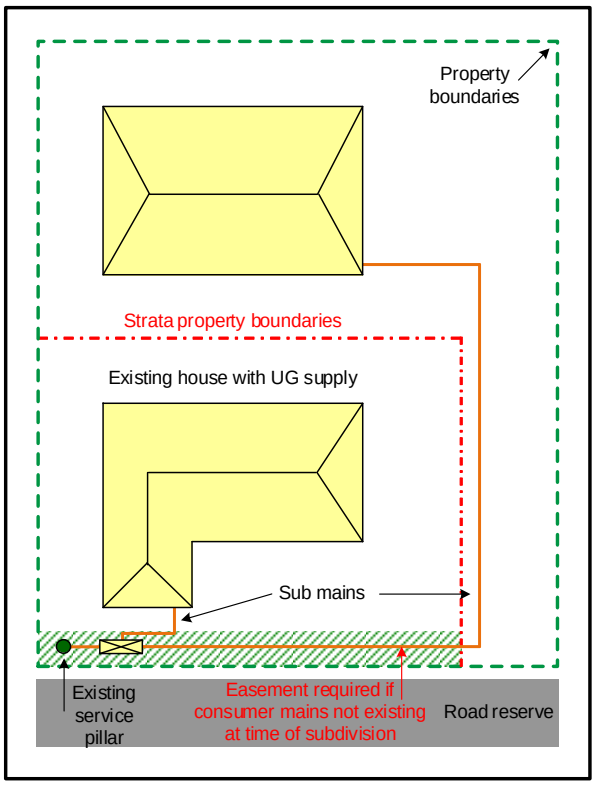

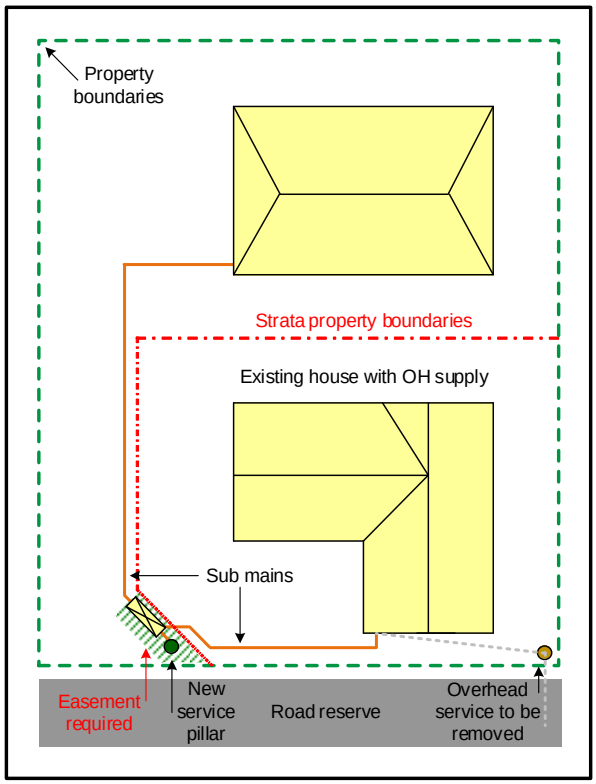

Examples are for illustration proposes only. May not be applicable in all cases.

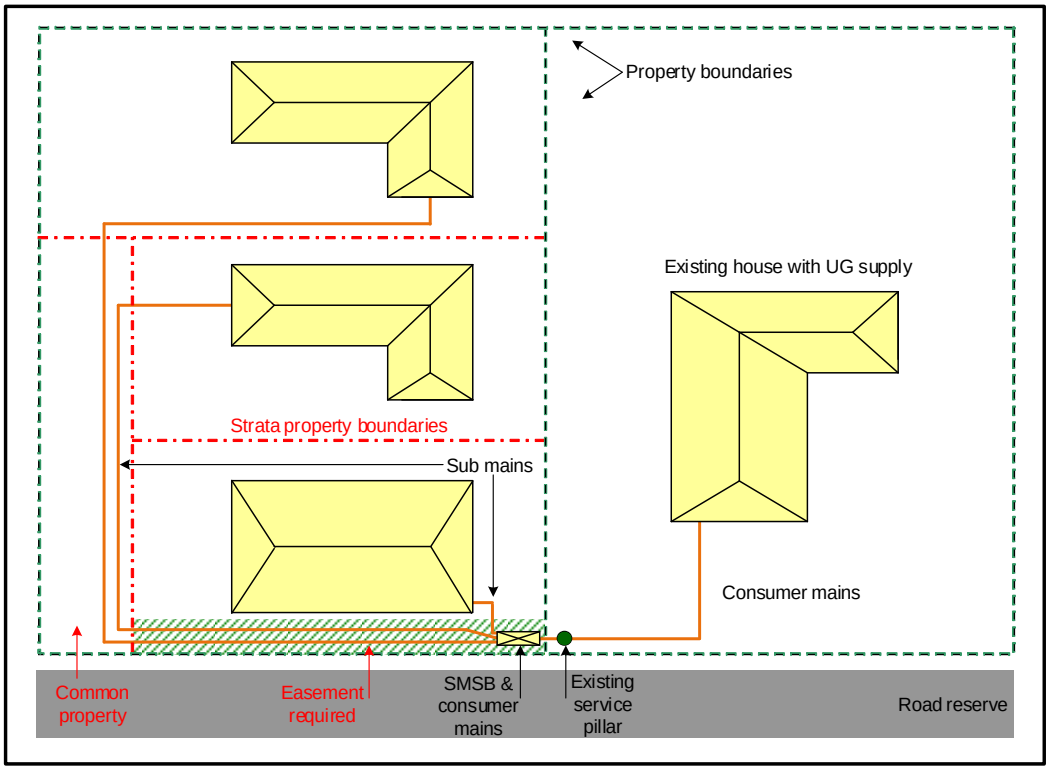

westernpower Distribution customer connection requirements	Strata connection supply arrangements Distributed master meter arrangements	Date # Aug 2021 Rev # One Sheet # 3 of 3
EDM Visio 499 01 284		Draw # DCCR 1-01-10

1. Drawings and notes shall be read in conjunction with applicable legislation, industry standards, codes, inclusive of but not limited to the:

a. AS/NZS 3000 and AS/NZS 4777;
b. Network embedded generation (EG) technical requirements
c. Underground distribution schemes manual (UDS);
d. WA Electrical Requirements (WAER);
e. WA Service and installation requirements (WASIR).

Note:
For strata subdivision developments and lot title clearance requirements refer to Western Power's WAPC terms and conditions.

2. For small subdivisions (up to 4) strata lots, the consumer's point of supply(connection) (POS) shall be the network nominated pillar or equivalent as determined by Western Power.

Note:
a. Where applicable network service and metering equipment(s) must be installed prior to the connection and energisation of the consumer mains cable to the network asset;
b. Consumer connections via a pit, wall box or to a large subdivision (5 or more) require Western Power approval before installation and or connection.

3. The connection/supply arrangement for the total development shall make provision on the MSB for the delivery of a standard three (3) phase connection service (as defined by the WASIR) to each individual lot (premises) within the subdivision.

4. Maximum number (#) of standard connection services shall not exceed four (4) to the nominated point of supply (connection) (pillar).

Note:
a. Each lot (premises) within the development is defined as a connection regardless of whether the connection is direct or via a SMSB;
b. In determining the number of connections to a pillar, all connections to or from adjacent lots (premises) shall be included;
c. Where any individual consumer mains cable exceeds 30m (route length) all new and existing connections within the subdivision shall be via a site main switch board (SMSB) as defined by the WASIR.

5. Consumer main/submain cables shall be sized and installed in accordance with AS/NZS 3000, WAER, and the WASIR.

6. SPD denotes service protection device. The device shall grade with the upstream network protection.

Note:
a. The fault rating of the SPD shall be as specified by the WAER, Technical rules and the WASIR;
b. The maximum current carrying of the device shall not exceed the rating of the network service main cable (Cat EE1425) which for a mini pillar is 125 amps;
c. The SPD primary function is network protection and isolation;
d. The device does not replace the installation main switch and shall not be deemed as protection for the consumer's electrical installation, equipment, or consumer mains cable.

7.MPD denotes meter protection device. The device shall grade with the upstream network protection.

Note:
a. The fault rating of the MPD shall be as specified by the network operator and the WASIR;
b. The maximum current carrying of the device shall not exceed the rating of the network metering installation which for whole current network meter is 80 amps;
c. The MPD primary function is meter protection and isolation.
d. The device does not replace the installation main switch and shall not be deemed as protection for the consumer's electrical installation, equipment, or downstream circuitry.

westernpower Distribution customer connection requirements	Drawing notes for 1-01-10	Date # Aug 2021
		Rev # First
		Sheet # 1 of 2
EDM Visio 499 01 284		Draw # DCCR 1-01-10N

8. MS denotes consumer's main switch. The device shall function and grade in accordance with this guideline, AS/NZS 3000, AS/NZS 4777 and the WASIR.

Note:

The MS for new, altered or augmented supply arrangements shall be:

a. A circuit breaker with visible and lockable isolation facilities which grades with the upstream protection;
b. Fault rated in accordance with AS/NZS 3000, AS/NZS 4777 and the WASIR;
c. Where require provide downstream protection in accordance with the appropriate industry standard;
d. Provide where required DER function, connection and control options as prescribed by the network embedded generation (EG) technical requirements.

9 Maximum Total:

Note:

a. Load (MTL) at the PCC shall not exceed the rating of the network service equipment and cable;
b. Generation (MTG) (hosting capacity) shall not exceed that specified for the PCC or as approved by Western Power's embedded generation EG technical requirements.

10. The illustrated earthing arrangement shall be in accordance with WAER, AS/NZS 3000 and the WASIR.

11. The network metering arrangement shall be in accordance with the Metering Code 2012 and the WASIR.

12. Consumer protection devices shown for illustration purposes only.

13. The configuration of consumer main and submain cables, is dependent on the consumer's connection requirement. The final connection to the individual lot (premises) may be single or three phase.

14. For additional information refer to Switchboard arrangement for small strata lot development guideline - 02 - 2021

westernpower Distribution customer connection requirements	Strata connection supply arrangements Drawing notes for 1-01-10	Date # March 2022
		Rev # Second
		Sheet # 2 of 2
EDM Visio 499 01 284		Draw # DCCR 1-01-10N

8.2.6 LV district substations

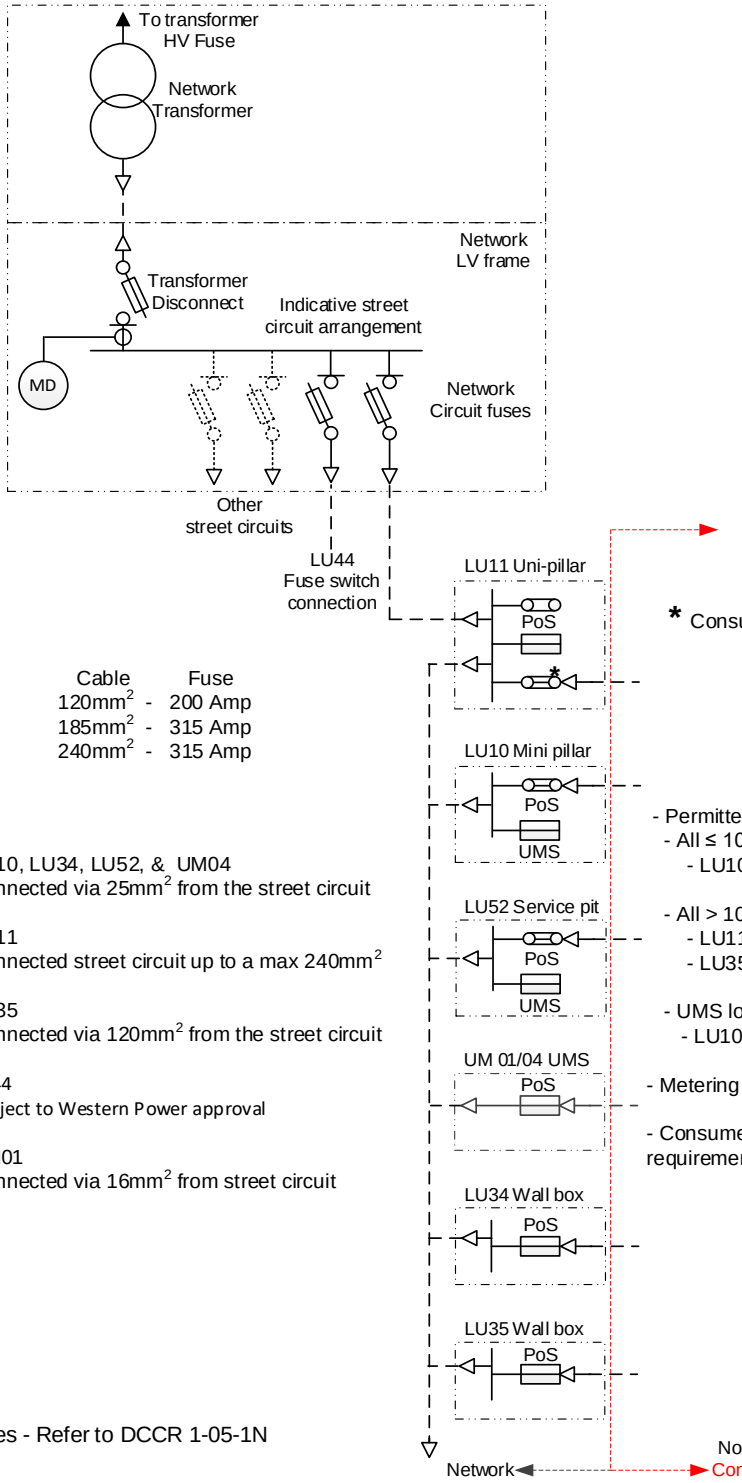

* Consumer connections may be via a block, link or fuse.

Cable		Fuse
120mm^2	-	200 Amp
185mm^2	-	315 Amp
240mm^2	-	315 Amp

LU10, LU34, LU52, & UM04
Connected via 25mm^2 from the street circuit

LU11
Connected street circuit up to a max 240mm^2

LU35
Connected via 120mm^2 from the street circuit

LU44
Subject to Western Power approval

UM01
Connected via 16mm^2 from street circuit

- Permitted maximum size consumer mains cable:
  - All ≤ 100 Amps
    - LU10, LU11, LU34 & LU52 is 1 x 35mm^2 cables / phase
  - All > 100 Amps
    - LU11 is 1 X 185mm^2 cables / phase
    - LU35 is 1 x 120mm^2 cables / phase
  - UMS loads up to 20 Amps
    - LU10, LU1, LU52, UM01 & UM04 is 1 x 16mm^2 / phase
- Metering arrangements refer to the WASIR
- Consumer capacity limits refer to the EG technical requirements & WASIR

Notes - Refer to DCCR 1-05-1N

westernpower Distribution customer connection requirements EDM 435 17 326	District Substation MPS LV loads up to 315A Shared LV circuit	Date # April 2023 Rev # Four Sheet # 1 of 4 Draw # DCCR 1-05-1

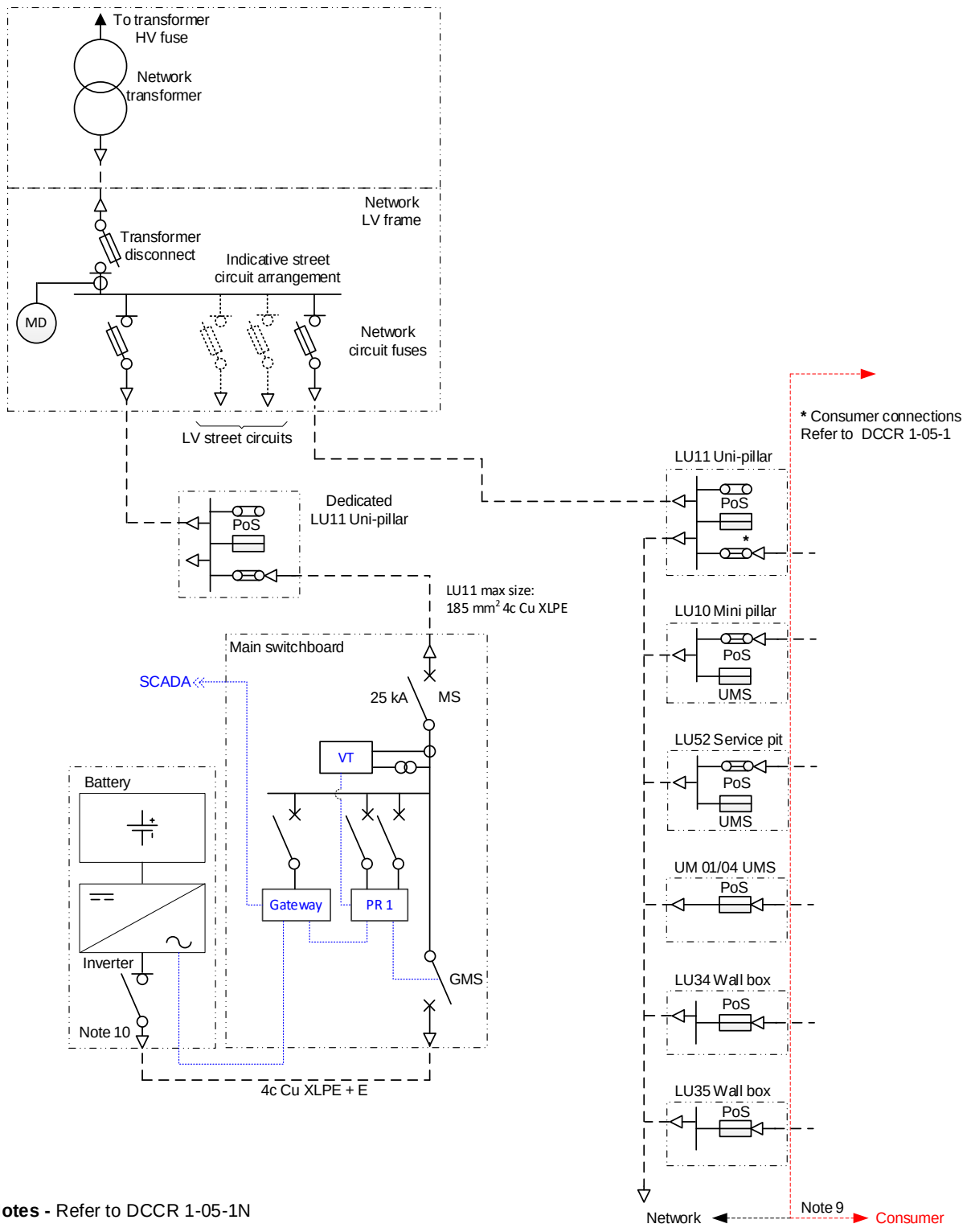

Notes - Refer to DCCR 1-05-1N

westernpower Distribution customer connection requirements	District substation MPS LV loads up to 315A 100 kW Community power bank connection (Unmetered)	Date # April 2023
		Rev # Two
		Sheet # 2 of 4
EDM Visio 499 01 284	Dedicated or shared LV circuit	Draw # DCCR 1-05-1

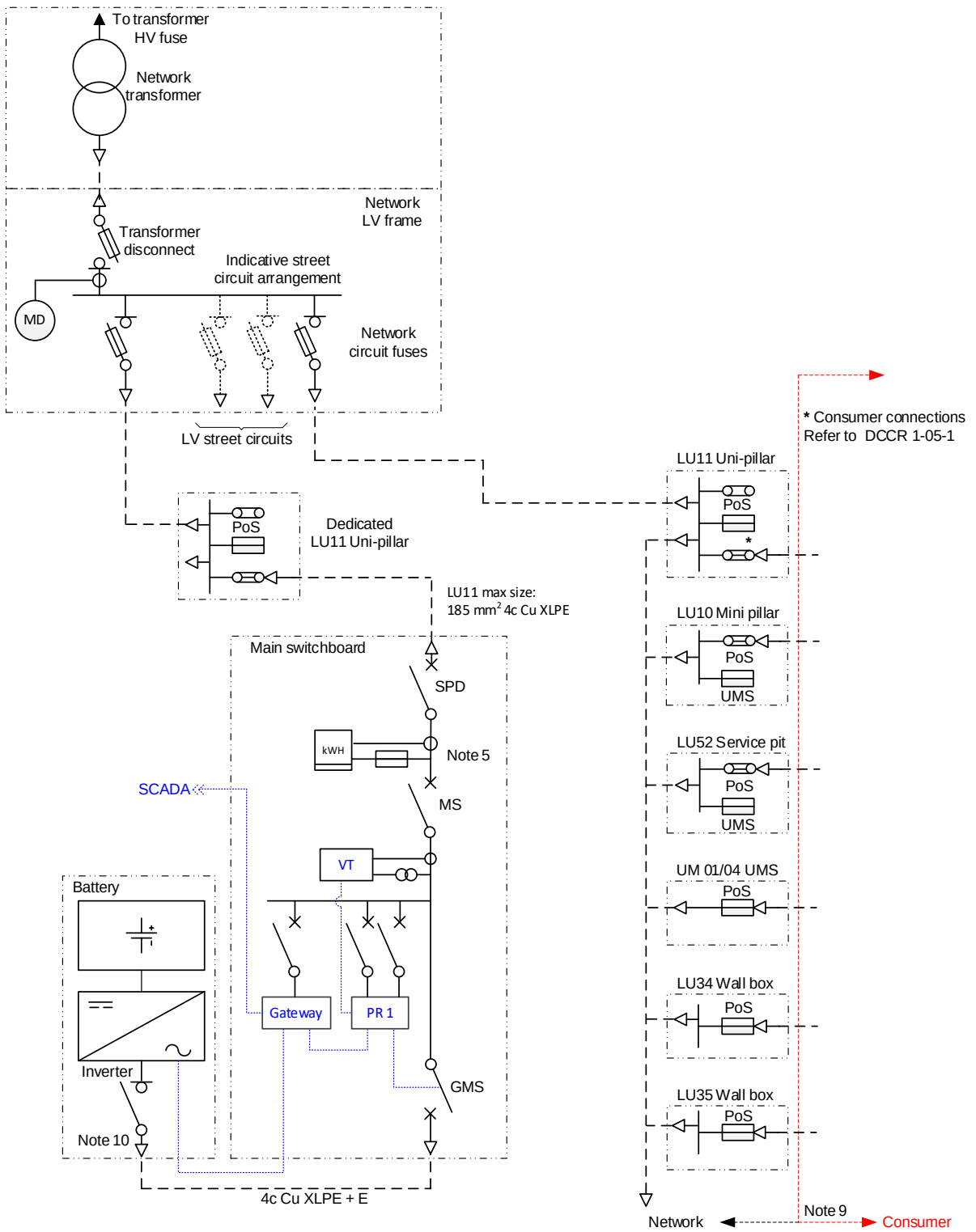

Notes - Refer to DCCR 1-05-1N

westernpower Distribution customer connection requirements	District substation MPS LV loads up to 315A 100 kW Community power bank connection (Network metered)	Date # April 2023
		Rev # Initial
		Sheet # 3 of 4
EDM Visio 499 01 284	Dedicated or shared LV circuit	Draw # DCCR 1-05-1

Notes DCCR 1-05-1N

Table 1

Network Connection Asset	Max Load (A) at PoS	Max Generation (A) at PoS	SPD Type (Notes 1, 4 & 5)	Max SPD Size	Network Connection Fuse
LU10 & LU52	100	Refer to EG technical requirements	Fuse	100	N/A
	UMS 20	Not permitted	Fuse	20	20
LU34	100	Refer to EG technical requirements	Fuse	100	N/A
LU11	101 - 250	Subject to technical review	CB	N/A	315 (max) (Note 3)
LU35	150 (Note 2)		CB	N/A	200
UM 01 & UM 04	20	Not permitted	Fuse	20	20
LU44	101 - 250	Subject to technical review	CB	N/A	315 (max) (Note 3)

Table 2

Transformer Size (kVA)	Max Street Circuit Fuse Size (A)	Max Demand on a Shared Feeder (A)
160	200	200 (Note 8)
315	315	315
500	315	315 (Note 6 and 7)
630	315	315 (Note 6)
1000	315	315 (Note 6)

Tables 1 & 2 Notes:

1. CB denotes fault limiting circuit breaker in accordance with AS/NZS 3000:2018 2.5.4.2 item (a).
2. 200A permitted in the CBD
3. A smaller connection fuse may be used for loads less than the maximum.
4. CT metering is required for loads above 100A.
5. Fault rating of the protection device shall be in accordance the WAER, Technical rules and WASIR. Unless stated otherwise the minimum rating shall be 25kA.
6. 400A fuse may be used in commercial / industry areas only. Maximum demand on a shared feeder remains at 315A.
7. For 500kVA transformers 400A fuses are not permitted if HV fuses are expulsion drop out type.
   Note: For specific detail refer to engineering requirements.
8. 160kVA transformers are no longer available for new connections.
9. Drawings to be read in conjunction with applicable legislation, industry standards, codes, including the WAER and WASIR.
10. Battery isolation indicative. Refer to the relevant industry standards/ and Installation/manufacturer requirements for complete details.

westernpower Distribution customer connection requirements	Drawing notes for DCCR 1-05-1	Date # April 2023
		Rev # Two
		Sheet # 4 of 4
EDM Visio 499 01 284		Draw # DCCR 1-05-1N

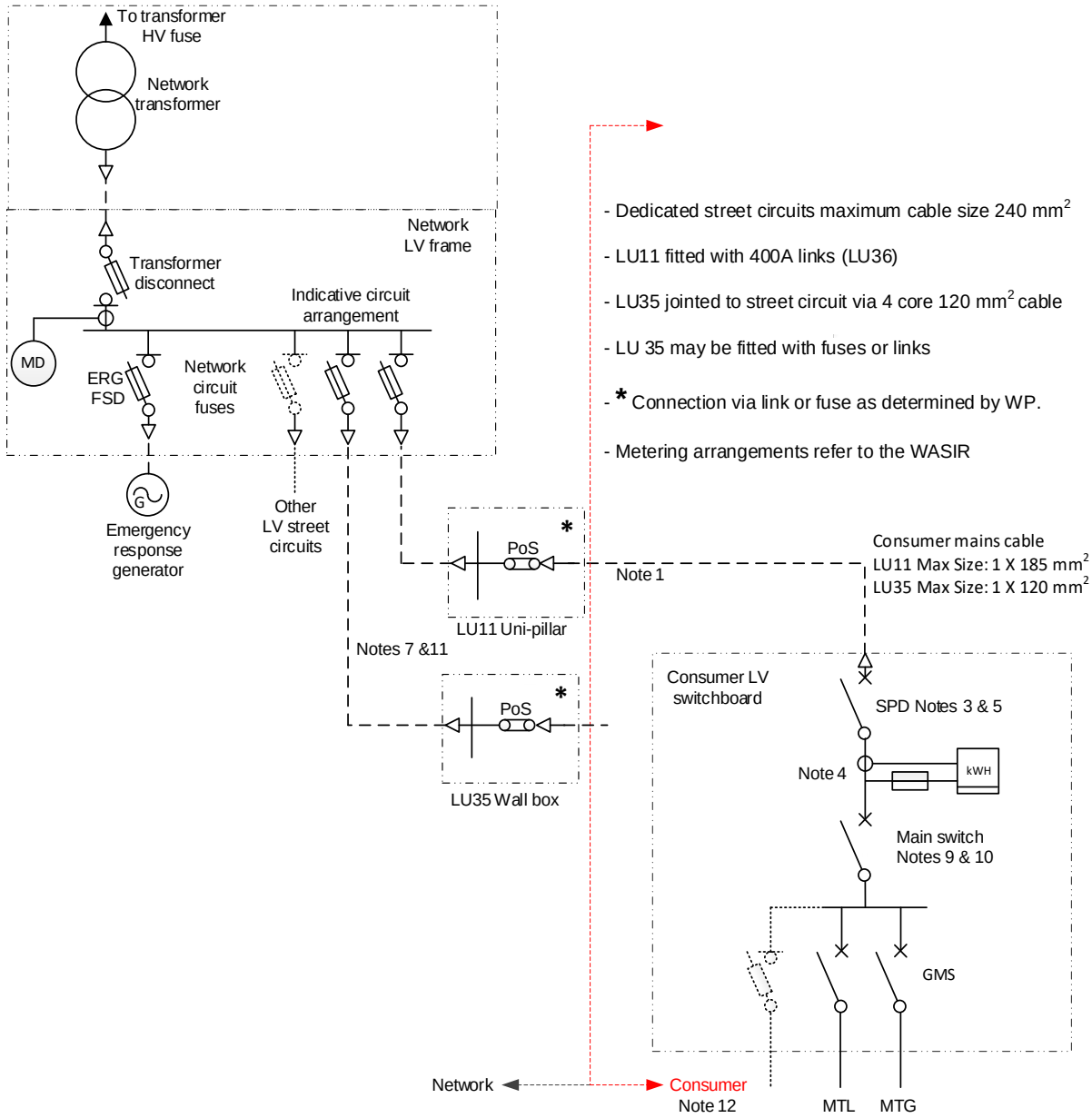

Notes - Refer to DCCR 1-05-N

Transformer Size (kVA)	Transformer FSD Fuse (A)	Max Street Circuit Fuse (A)	Max. Consumer Load A / Ø LU11	LU35	Consumer Max Total Generation	Max. ERG Fuse Size (A)
160 (Note 11)	Refer to the DSMP for detail	200	150	150	Subject to technical review	NA
315		315	250	200		630
500 (from DOF) (Note 11)		315	250	200		NA
500 (from RMU) (Note 11)		400	315	200		
630		400	315	200		630

westernpower Distribution customer connection requirements	District substation MPS LV loads up to 315A Dedicated LV circuit	Date # Jun 2022
		Rev # Two
		Sheet # 1 of 1
EDM Visio 499 01 284		Draw # DCCR 1-05-2

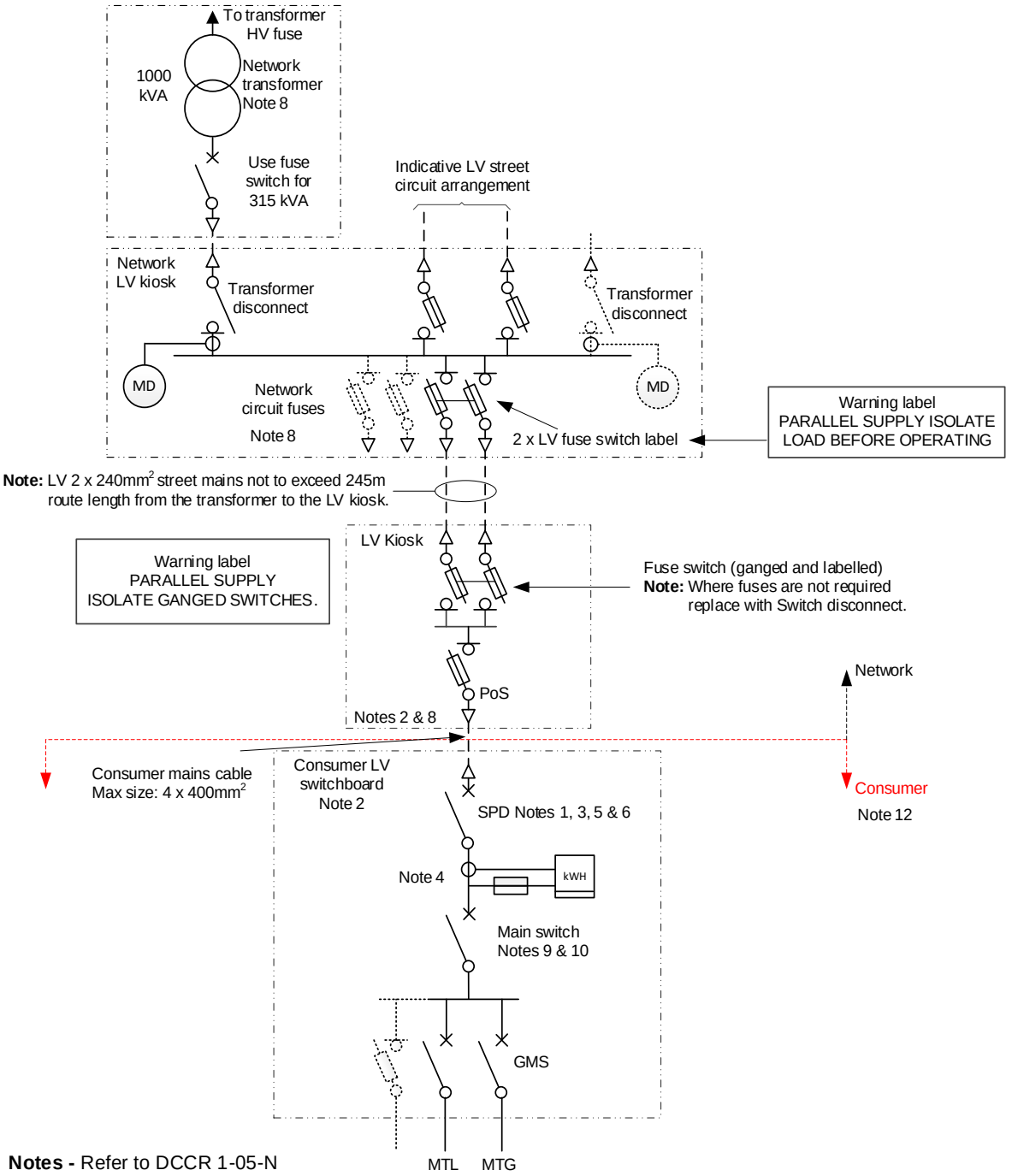

Notes - Refer to DCCR 1-05-N

Voltage	6kV	11kV	11kV	22kV	22kV
HV Fuse Type	AIR HRC	DOF	AIR HRC	DOF	AIR HRC
Network Connection LV Fuse Size	2 x 400	2 x 315	2 x 400	2 x 315	2 x 400
Consumer: Total Max Load (A)	630	500	630	500	630
Consumer Fuse (A)	Consumer to perform grading study with upstream protection device				
Consumer: Total Max Generation	Subject to technical review				

westernpower Distribution customer connection requirements	District substation Non - MPS LV loads up to 1000A Dedicated LV circuit	Date # Jun 2022
		Rev # Four
		Sheet # 1 of 1
EDM Visio 499 01 284		Draw # DCCR 1-05-3

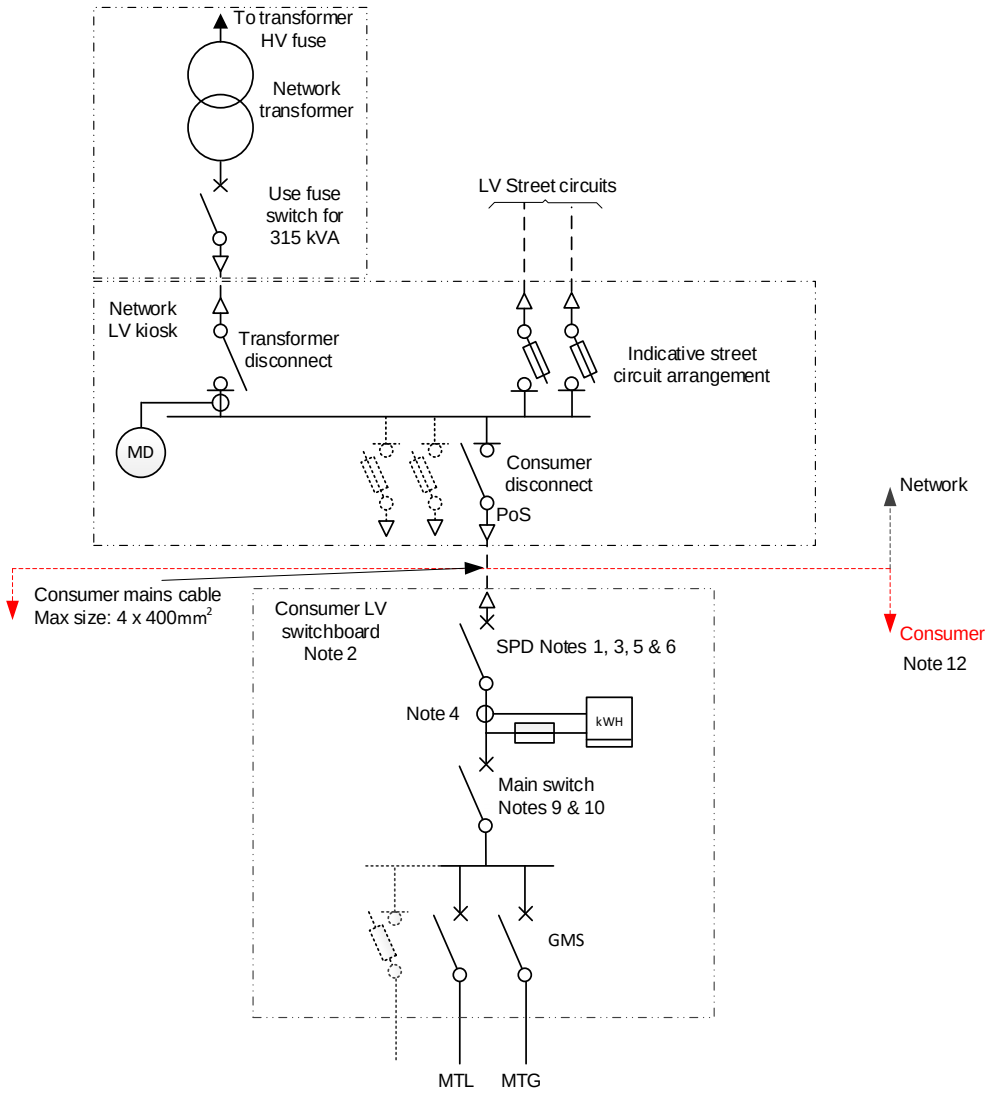

Notes - Refer to DCCR 1-05-N

Transformer Size (kVA)	Consumer Fuse (A) Note 1	Consumer Max Total Load (A/Phase) Note 2	Consumer Max Total Generation
315	Consumer to perform grading study with upstream protection device	100 *	Subject to technical review
500 (Note11)		600	
500 (Note 11)		655 (Tx Rating)	
630		510 *	
1000		1000 *	

Note 1. Where fuses are not required replace with switch disconnect.
Note 2. * Maximum consumer load to allow for future 315A LV street circuit from the network LV kiosk.
The maximum consumer load can be increased above the values shown, if the LV street feed is not at full capacity and there is no foreseeable increase in load on the LV street feed in the future.
A grading study must be performed to confirm the maximum allowable consumer load in these cases.

westernpower Distribution customer connection requirements	District substation Non MPS LV loads up to 1000A Dedicated LV circuit	Date # Jun 2022
		Rev # Five
		Sheet # 1 of 1
EDM Visio 499 01 284		Draw# DCCR 1-05-4

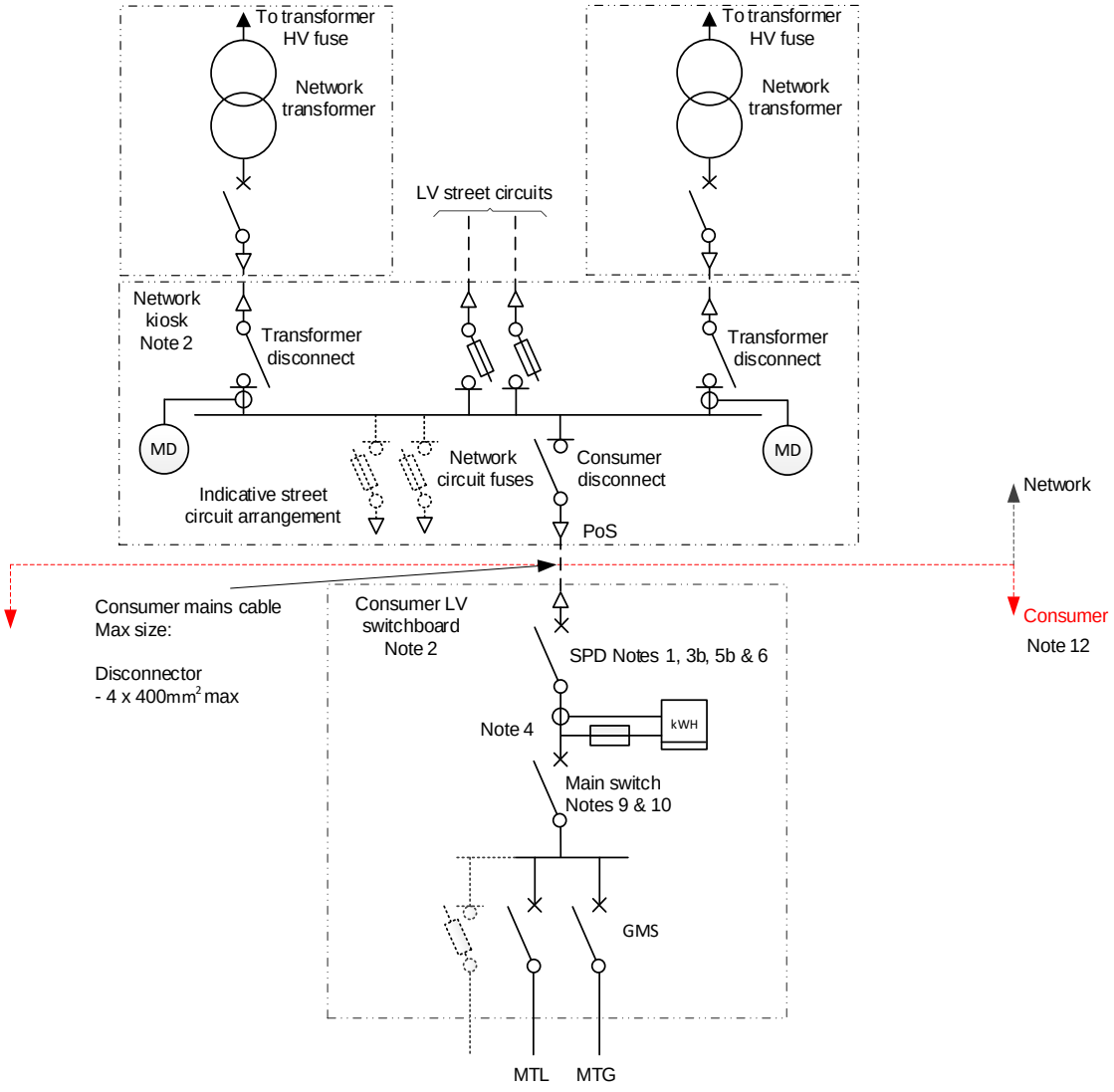

Notes - Refer to DCCR 1-05-N

Transformer Size (kVA)	Consumer Disconnect	Max. Consumer Load (A/Phase) Note 1	Consumer: Max Total Generation
2 x 630	Refer to DSPM for detail	1000	Subject to technical review
2 x 1000		1400	
Note1 Consumer to perform grading study with upstream protection device.			

westernpower Distribution customer connection requirements	District substation Non MPS LV loads up to 1400A Dedicated LV circuit	Date # Jun 2022
		Rev # Five
		Sheet # 1 of 1
EDM Visio 499 01 284		Draw# DCCR 1-05-5

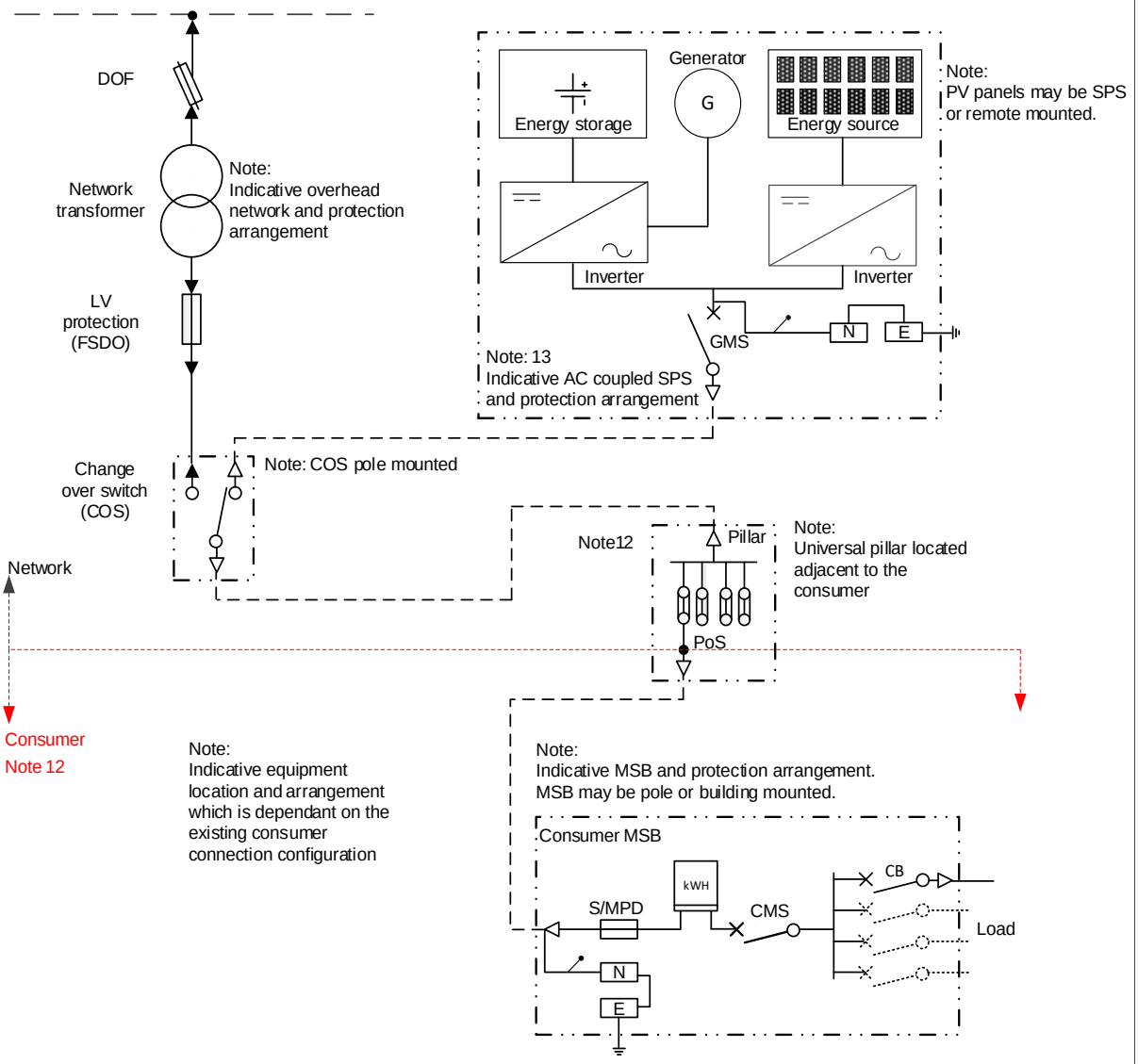

westernpower Distribution customer connection requirements EDM Visio 499 01 284	Network stand-alone power supply (SPS) AC coupled system with changeover switch Dedicated LV connection	Date # Sept 2020 Rev # Initial Sheet # 1 of 4 Draw# DCCR 1-05-6

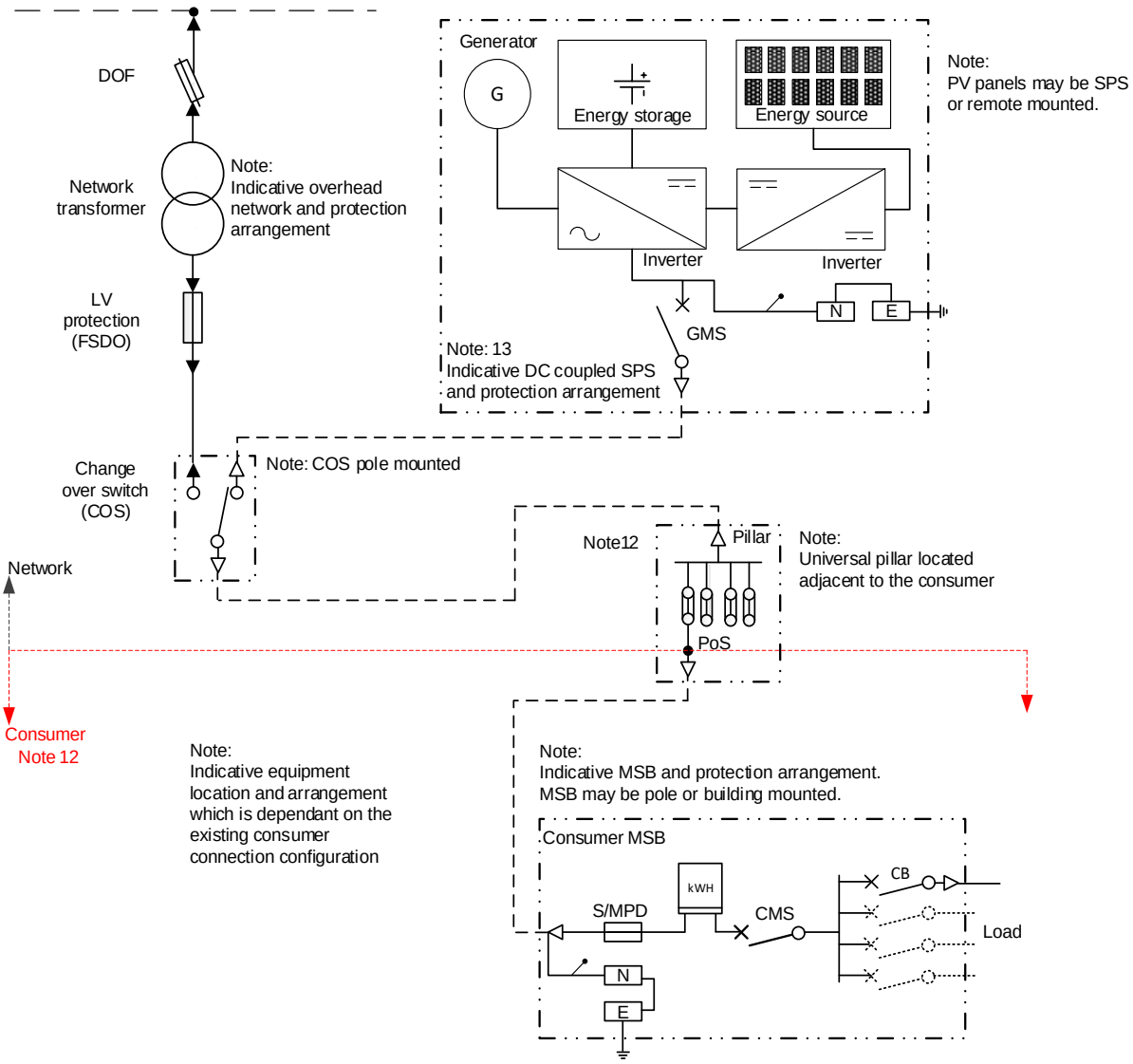

westernpower Distribution customer connection requirements	Network stand-alone power supply (SPS) DC coupled system with changeover switch Dedicated LV connection	Date # Sept 2020
		Rev # Initial
		Sheet # 2 of 4
EDM Visio 499 01 284		Draw# DCCR 1-05-6

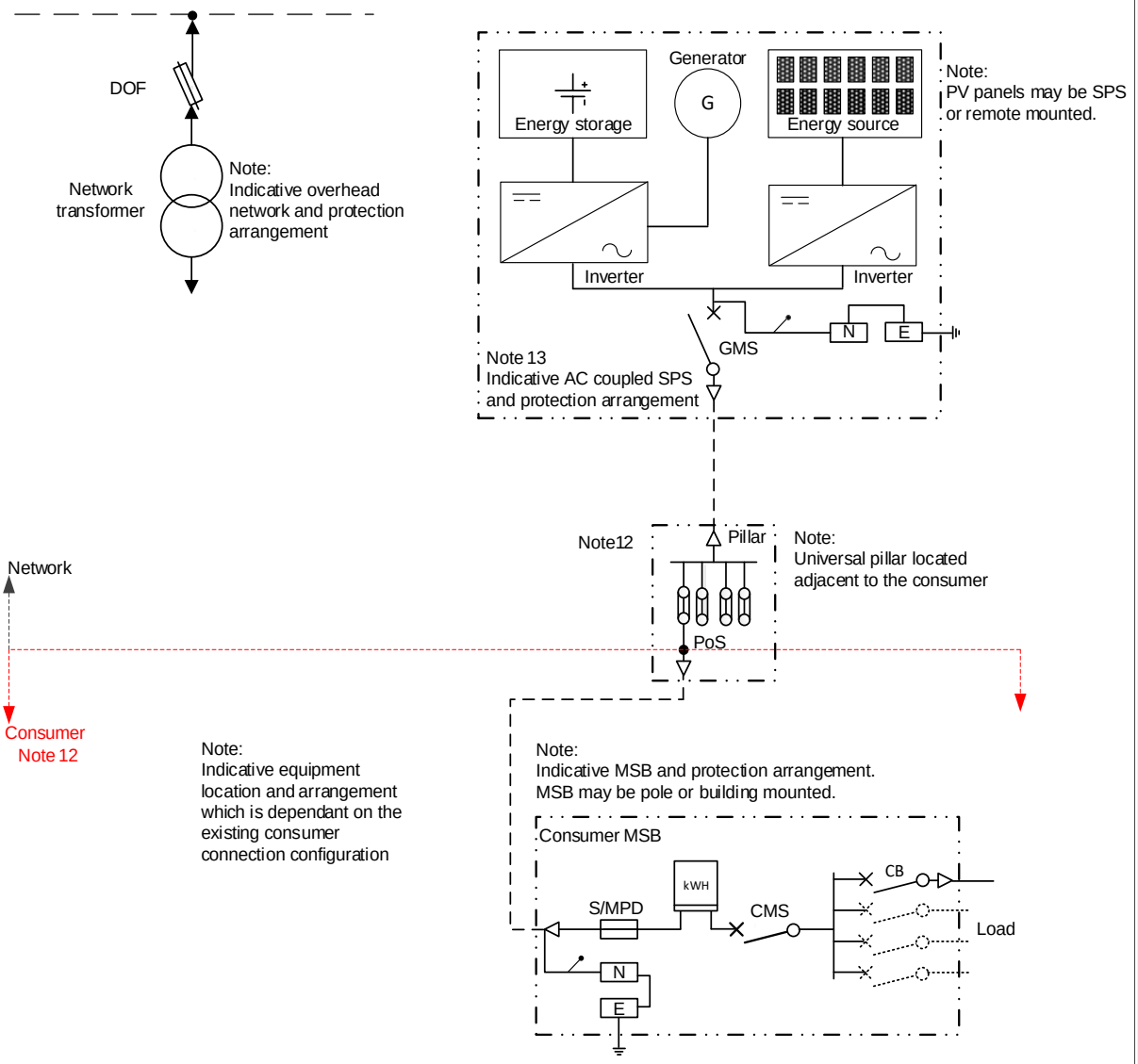

westernpower Distribution customer connection requirements	Network stand-alone power supply (SPS) AC coupled system Dedicated LV connection	Date # Sept 2020
		Rev # Initial
		Sheet # 3 of 4
EDM Visio 499 01 284		Draw# DCCR 1-05-6

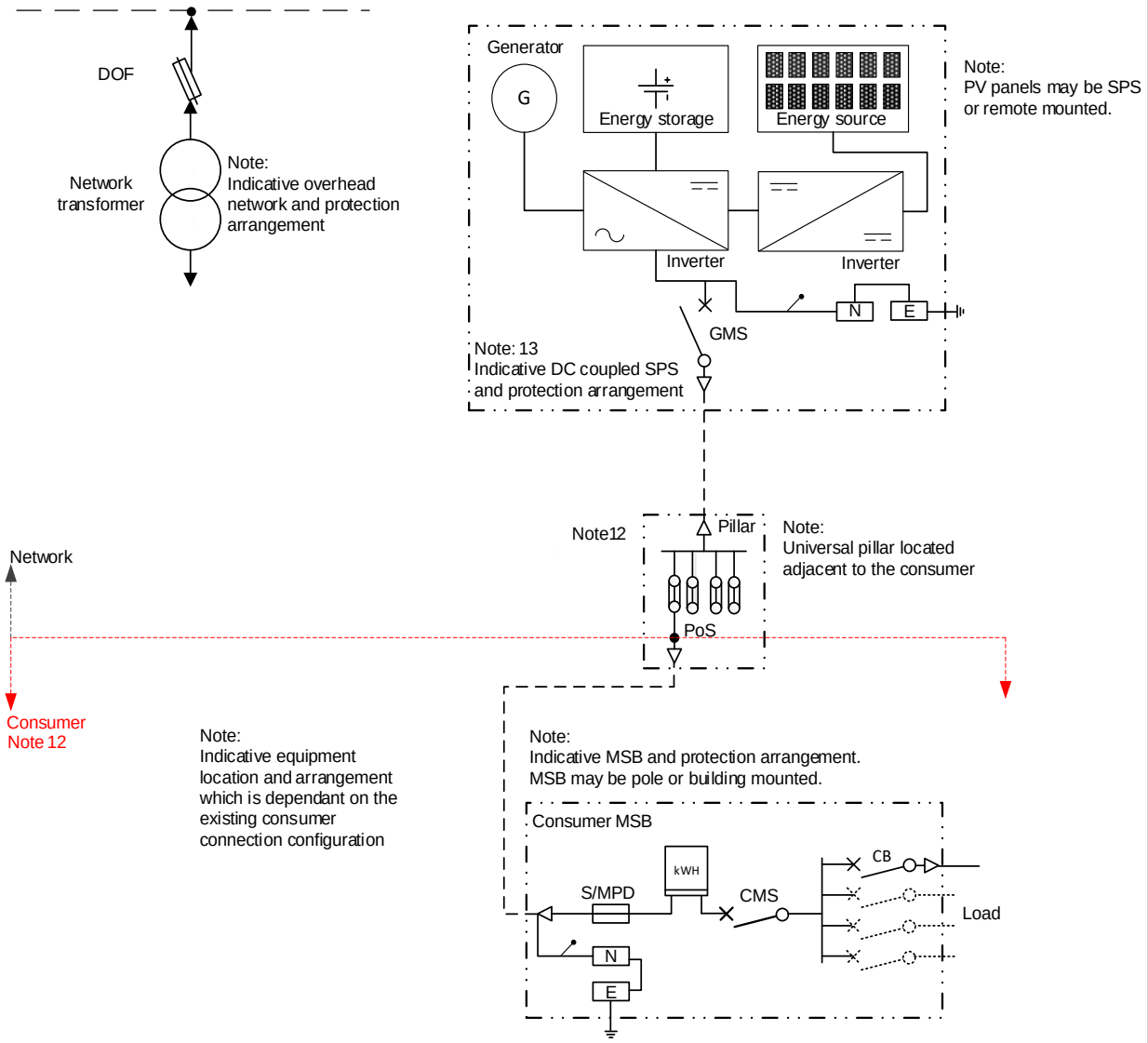

westernpower Distribution customer connection requirements EDM Visio 499 01 284	Network stand-alone power supply (SPS) DC coupled system Dedicated LV connection	Date # Sept 2020 Rev # Initial Sheet # 4 of 4 Draw# DCCR 1-05-6

Notes DCCR 1-05-N

1. The consumer's point of supply(connection) (POS) shall be:
   a. Pillar, or wall box;
   b. The LV terminals for connections to a district LV frame or kiosk; or
   c. The transformer terminals for connections to a sole use transformer rated above 160kVA up to 1MVA
2. The consumer's switchboard shall be contiguous with the substation/kiosk.
3. Fault rating of the protection device shall be in accordance with the WAER, Technical rules, WASIR; and for:
   a. Single transformer connections 160kVA and above the SPD shall be minimum of 25kA; and
   b. Multiple transformer connections the SPD shall have a minimum rating of 50kA.
4. CT LV metering is required for loads greater than 100A. Loads equal to or less than 100A shall be direct metered.
5. SPD denotes service protection device. CB must grade with the:
   a. Network connection fuse.
   b. Network transformer HV fuse or LV MCCB/fuse.
6. SPD/TX isolation device shall be tested by the electrical contractor to Western Power's agreed settings.
7. For consumer connections exceeding 200A this arrangement is applicable only when it is not possible to install a transformer on the consumer's property and the existing nearby transformer does not have the necessary spare capacity to meet the consumer's requirements.
8. This arrangement is only applicable for 1000kVA transformers and is limited to heritage buildings where it is not possible to provide a substation site.
9. Consumer may have more than one main switch as per WAER, WASIR, AS/NZS 3000 and AS/NZS 4777.
10. CB shown as main switch (es) – for illustration purposes only.
11. 160 and 500kVA transformers are no longer available for new connections.
12. Drawings to be read in conjunction with applicable legislation, industry standards, codes, including the WAER, WASIR and network embedded generation (EG) technical requirements.
13. SPS protection indicative. Refer to manufacture for details.

westernpower Distribution customer connection requirements	Drawing notes for DCCR 1-05-2 to 1-05-6	Date # Apl 2021
		Rev # Three
		Sheet # 1 of 1
EDM Visio 499 01 284		Draw # DCCR 1-05-N

8.2.7 LV sole use connections

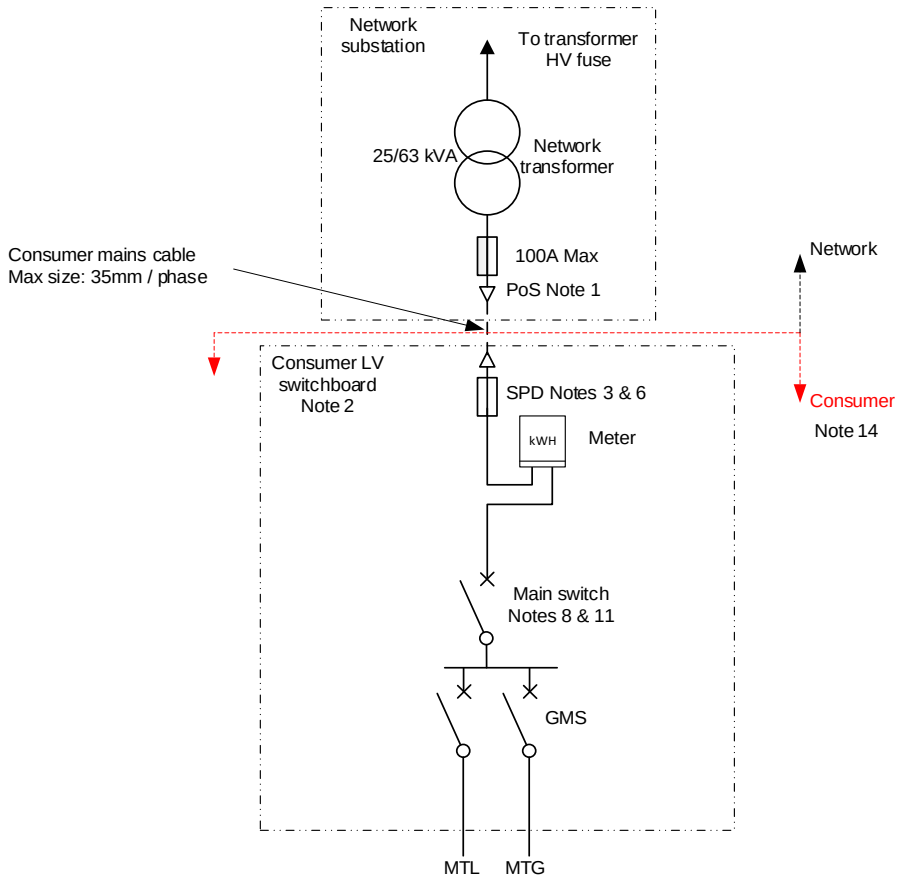

Notes - Refer to DCCR 1-06-N

Transformer Size (kVA)	Voltage	Max Consumer Load (A/Phase)	Consumer Mains Max mm² / Phase	Maximum Total Generation
25	240	100	1 x 35	Subject to technical review
	480	50	1 x 35	
25 (Note 12)	415	32	1 x 35	
63		82.5	1 x 35	

westernpower Distribution customer connection requirements	Sole use substation LV loads up to 82A 3Ø Underground Dedicated transformer	Date # Aug 2018
		Rev # Initial
		Sheet # 1 of 1
EDM Visio 499 01 284		Draw # DCCR 1-06-2

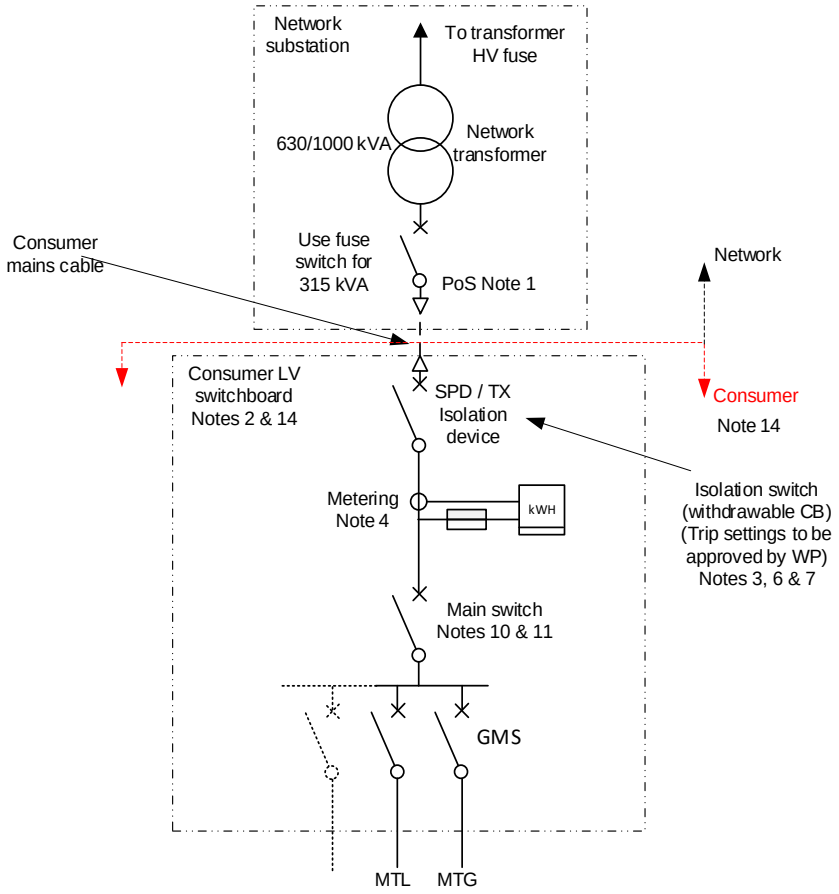

Notes - Refer to DCCR 1-06-N

Transformer Size (kVA)	Max. Consumer Load (A/Phase)	Consumer Mains Cable mm^2 / Phase	Consumer: Max Total Generation
160	Historical reference		Subject to technical review
315	415	2 x 630	
500 (Note 12)	Historical reference		
630	825	2 x 630	
1000	1310	3 x 630	
Note. Permissible number and size of consumer mains cables connected to each transformer terminal is manufacturer dependant. Refer to engineering requirements for specific detail.			

westernpower Distribution customer connection requirements	Sole use substation LV loads up to 1310A 3Ø Underground Dedicated transformer	Date # Nov 2020
		Rev # Two
		Sheet # 1 of 1
EDM Visio 499 01 284		Draw # DCCR 1-06-3

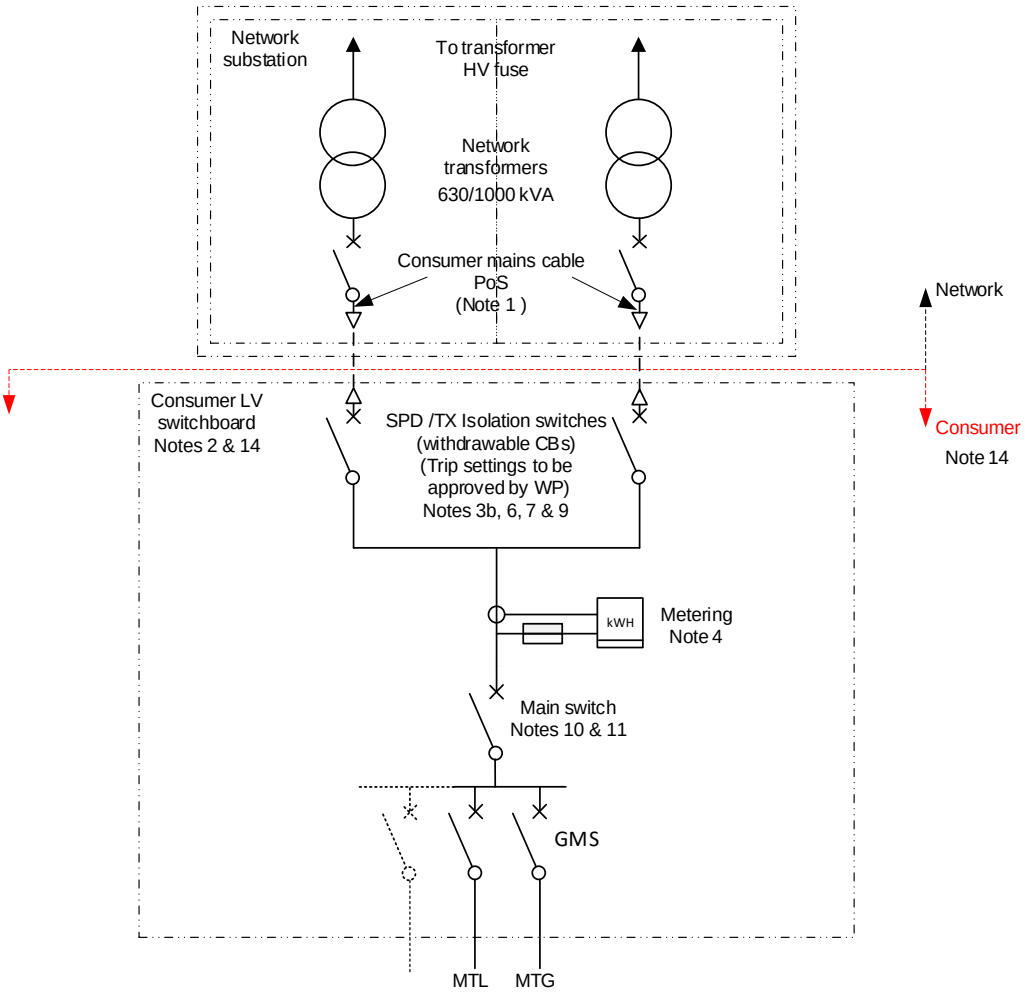

Notes - Refer to DCCR 1-06-N

Transformer Size (kVA)	Max. Consumer Load (A/Phase)	Consumer Mains Max mm² /Phase /TX	Consumer: Max Total Generation
2 X 630	1625	2 x 630	Subject to technical review
2 X 1000	2500	3 x 630	

westernpower Distribution customer connection requirements	Sole use substation LV load up to 2500A 3Ø Underground Dedicated transformers	Date # Apl 2021
		Rev # Two
		Sheet # 1 of 1
EDM Visio 499 01 284		Draw # DCCR 1-06-4

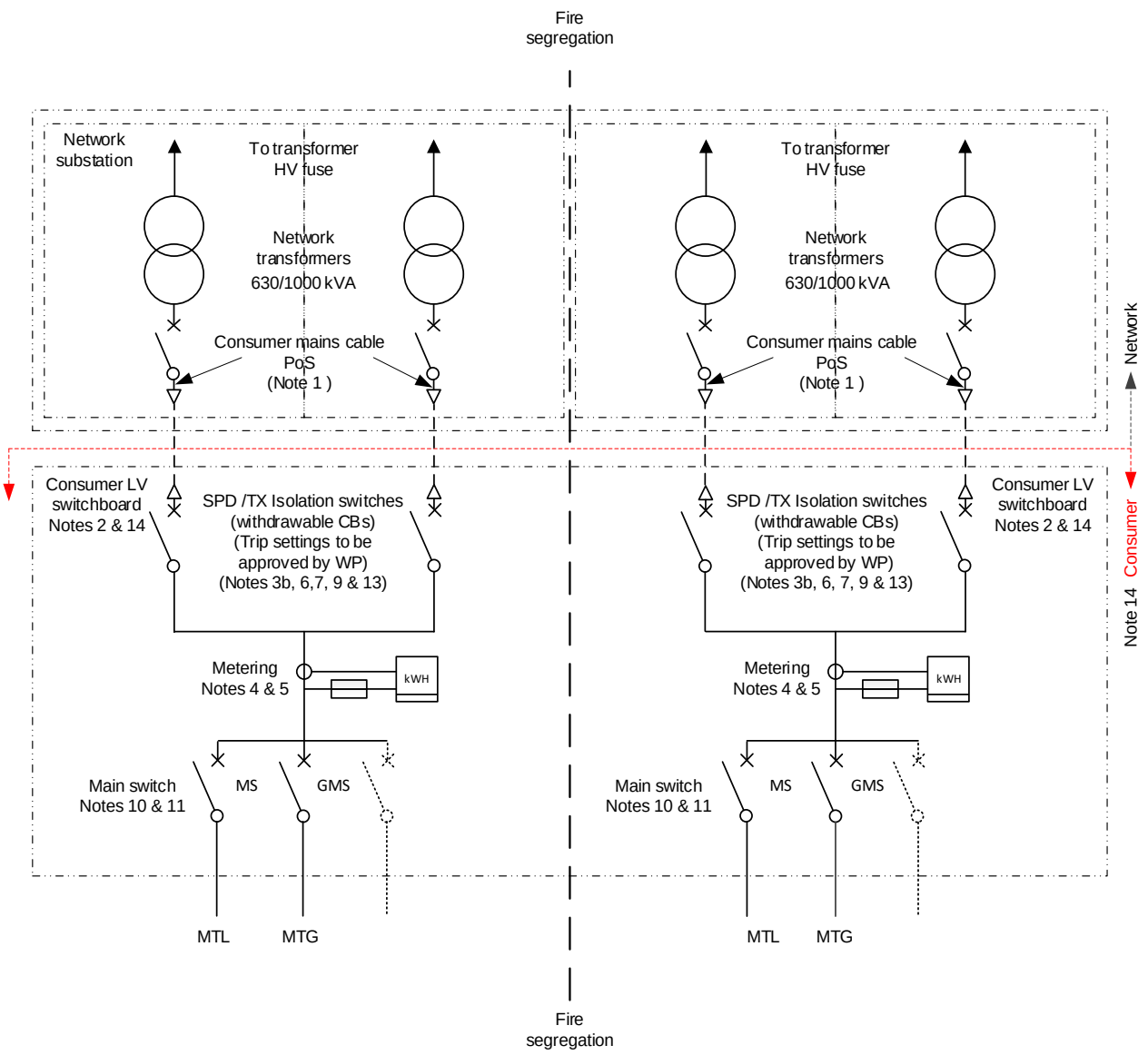

Notes - Refer to DCCR 1-06-N

Transformer Size (kVA)	Max. Consumer Load (A/Phase)	Consumer Mains Max mm² /Phase /TX	Consumer: Max Total Generation
2 X 630	1625	2 x 630	Subject to technical review
2 X 1000	2500	3 x 630	

westernpower Distribution customer connection requirements	Sole use substation LV load up to 5000A 3Ø Underground Dedicated transformers	Date # Apl 2021
		Rev # Two
		Sheet # 1 of 1
EDM Visio 499 01 284		Draw # DCCR 1-06-5

Notes DCCR 1-06-N

1. The consumer's point of supply(connection) (POS) shall be:
   a. Pillar; or
   b. For connections to transformers rated up to 25kVA the:
      i. Consumer's mains connection box for an overhead service supply;
      ii. Terminals within the pillar for a pole to pillar supply (including 2 X 25 kVA);
      iii. Transformer fuse where direct connected; or
   c. The bar system for connections to transformers rated at 63kVA; or
   d. The LV terminals for connections to a district LV frame or kiosk; or
   e. The transformer terminals for connections to a sole use transformer rated above 63kVA and up to 1MVA.

   Note: Where there are parallel transformer connections (PoS) they shall be deemed to be a single PoS for the purposes of determining the supply arrangement and load/generation limitations.

2. The consumer's switchboard shall be contiguous with the substation.
3. Fault rating of the protection device shall be in accordance with the WAER, Technical rules, WASIR and for:
   a. Single transformer connections 160kVA and above the SPD shall be minimum of 25kA; and
   b. Multiple transformer connections the SPD shall have a minimum rating of 50kA.
4. CT LV metering is required for loads greater than 100A. Loads equal to or less than 100A shall be whole current metered.
5. Commercial consumers may be LV metered in 2MVA transformer groups at one combined location to allow for future summation where required.
6. Services protection device (SPD). For sole use CT metered transformer arrangements, the SPD may also be used as the transformer isolation device. The SPD must grade with the:
   a. Network connection fuse.
   b. Network transformer HV fuse.
7. SPD/TX isolation device shall be tested by the electrical contractor to Western Power's agreed settings.
8. Consumer main switch (CMS) shall be a circuit breaker which grades with the upstream protection.
9. Overload trip on the CB must be set at 1.147 times the rated current of the transformer:
   a. 630kVA – 825A;
   b. 1000kVA – 1310A.
10. Consumers may have more than one main switch as per WAER, WASIR, AS/NZS 3000 and AS/NZS 4777.
11. CB shown as main switch (es) – for illustration purposes only.
12. 25, 160 and 500kVA transformers are no longer available for new connections.
13. Paralleling of 2MVA transformer groups shall be prevented by mechanical interlocking.
14. Drawings to be read in conjunction with applicable legislation, industry standards, codes, including the WAER, WASIR and the network embedded generation (EG) technical requirements.

westernpower Distribution customer connection requirements	Drawing notes for DCCR 1-06-2 to 1-06-5	Date # Mar 2022
		Rev # Second
		Sheet # 1 of 1
EDM Visio 499 01 284		Draw # DCCR 1-06-N

8.2.8 HV consumer owned substations

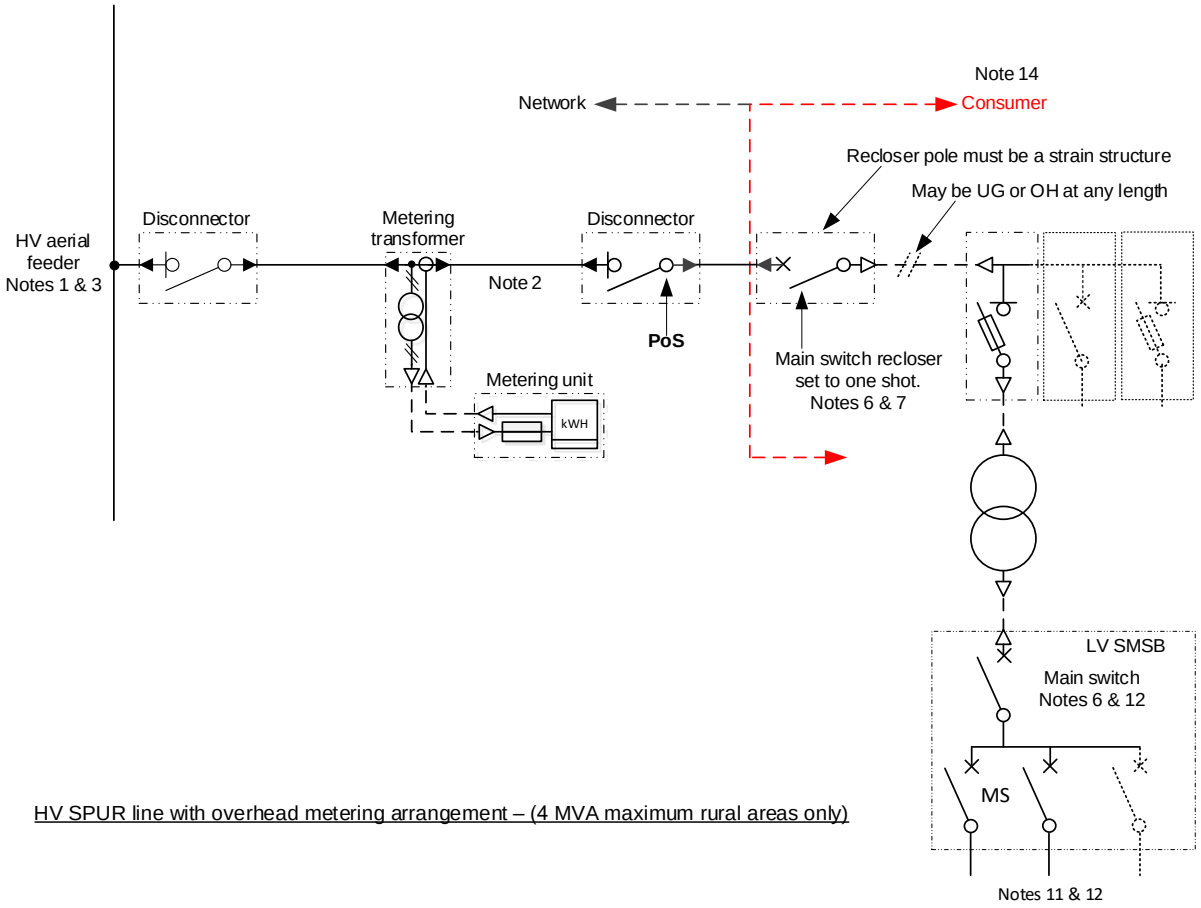

HV SPUR line with overhead metering arrangement – (4 MVA maximum rural areas only)

Notes - Refer to DCCR 1-07-N

westernpower Distribution customer connection requirements	Consumer owned substation HV Metering Overhead pole mounted outdoor	Date # Aug 2018
		Rev # Initial
		Sheet # 1 of 2
EDM Visio 499 01 284		Draw # DCCR 1-07-1a

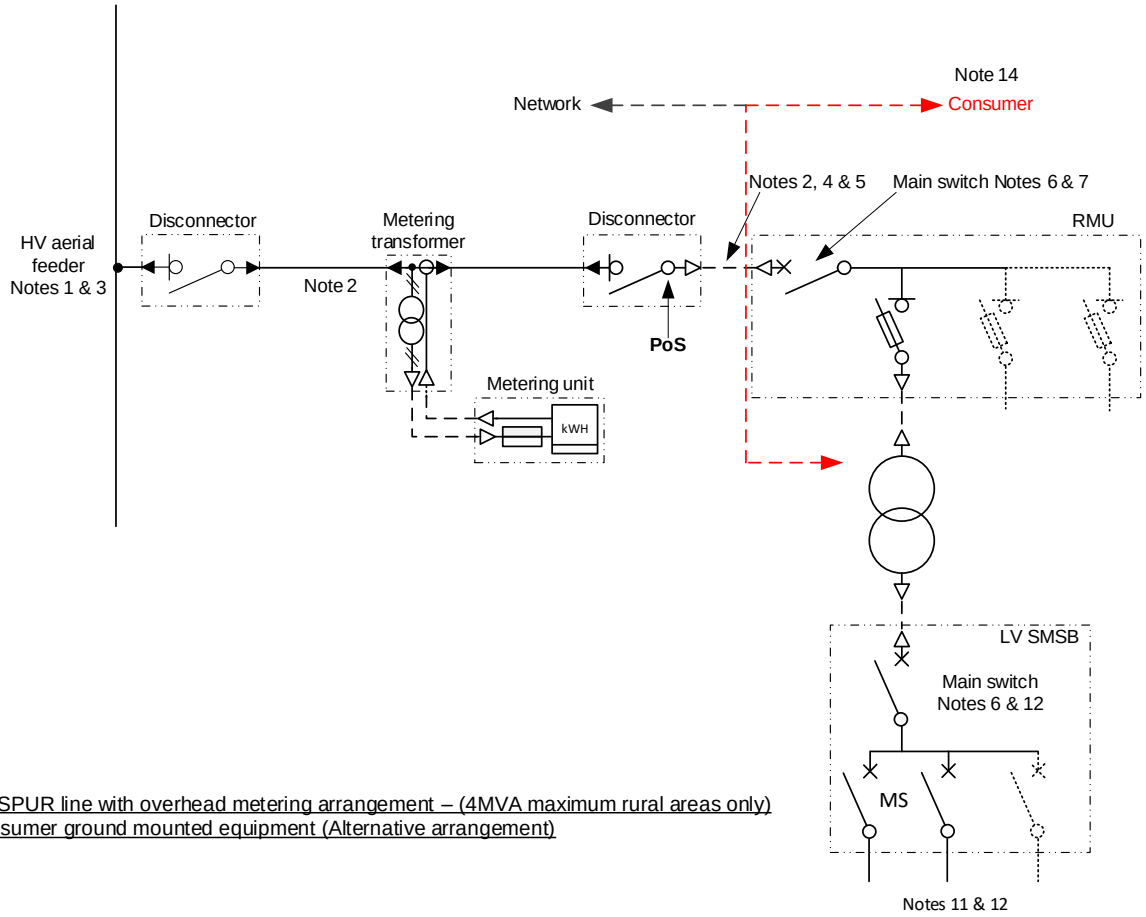

HV SPUR line with overhead metering arrangement – (4MVA maximum rural areas only)
Consumer ground mounted equipment (Alternative arrangement)

Notes - Refer to DCCR 1-07-N

westernpower Distribution customer connection requirements	Consumer owned substation HV Metering Ground mounted outdoor	Date # Aug 2018
		Rev # Initial
		Sheet # 2 of 2
EDM Visio 499 01 284		Draw # DCCR 1-07-1b

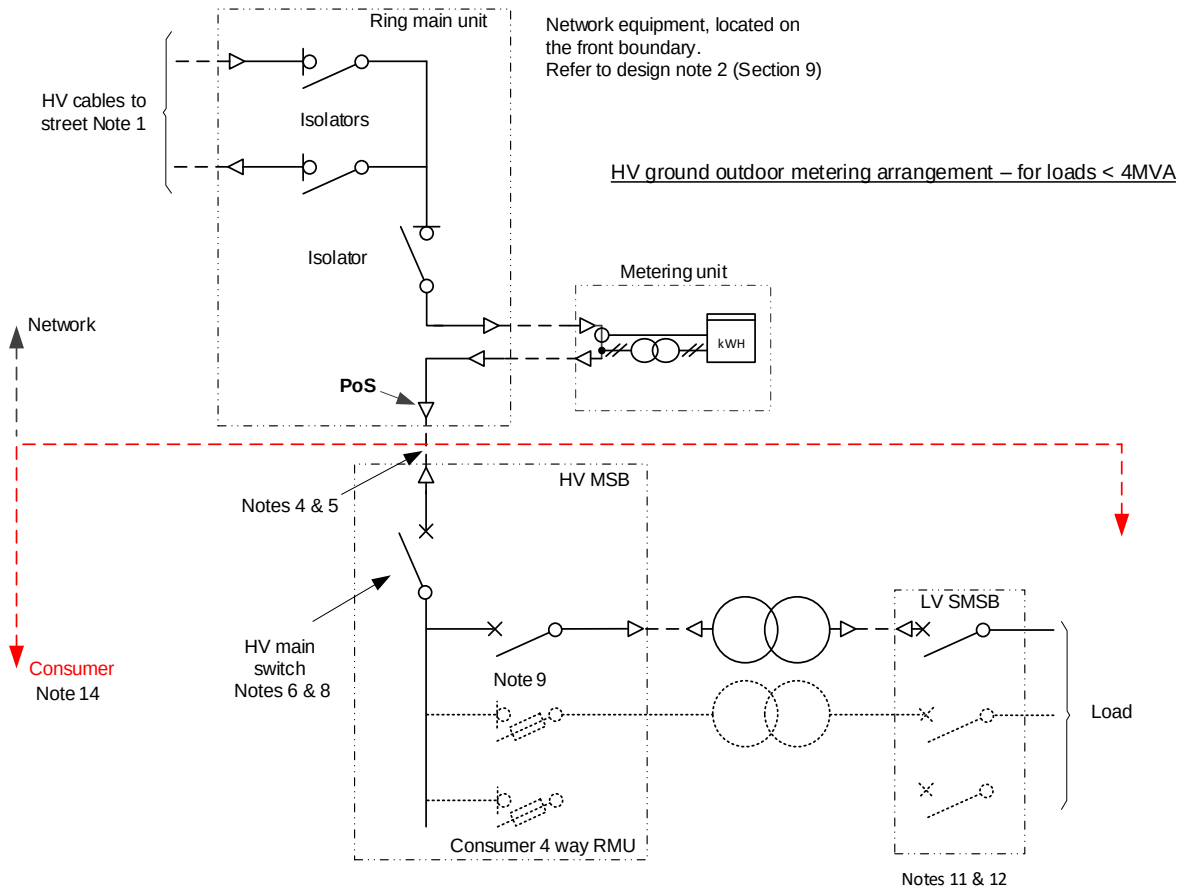

Notes - Refer to DCCR 1-07-N

westernpower Distribution customer connection requirements	Consumer owned substation HV Metering Ground mounted outdoor	Date # Aug 2018
		Rev # Initial
		Sheet # 1 of 1
EDM Visio 499 01 284		Draw # DCCR 1-07-2

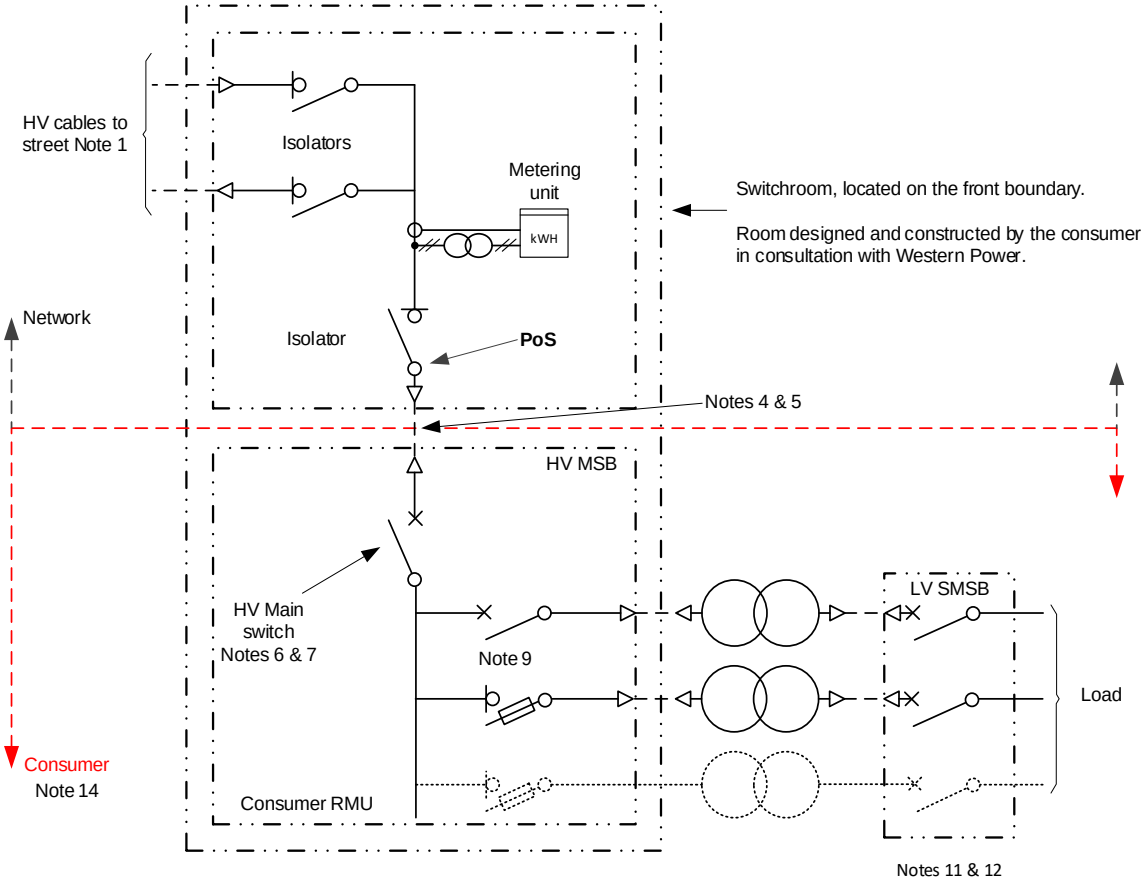

Notes - Refer to DCCR 1-07-N

westernpower Distribution customer connection requirements	Consumer owned substation HV Metering Ground mounted indoor (Cable connected)	Date # Sept 2020
		Rev # One
		Sheet # 1 of 4
EDM Visio 499 01 284		Draw # DCCR 1-07-3

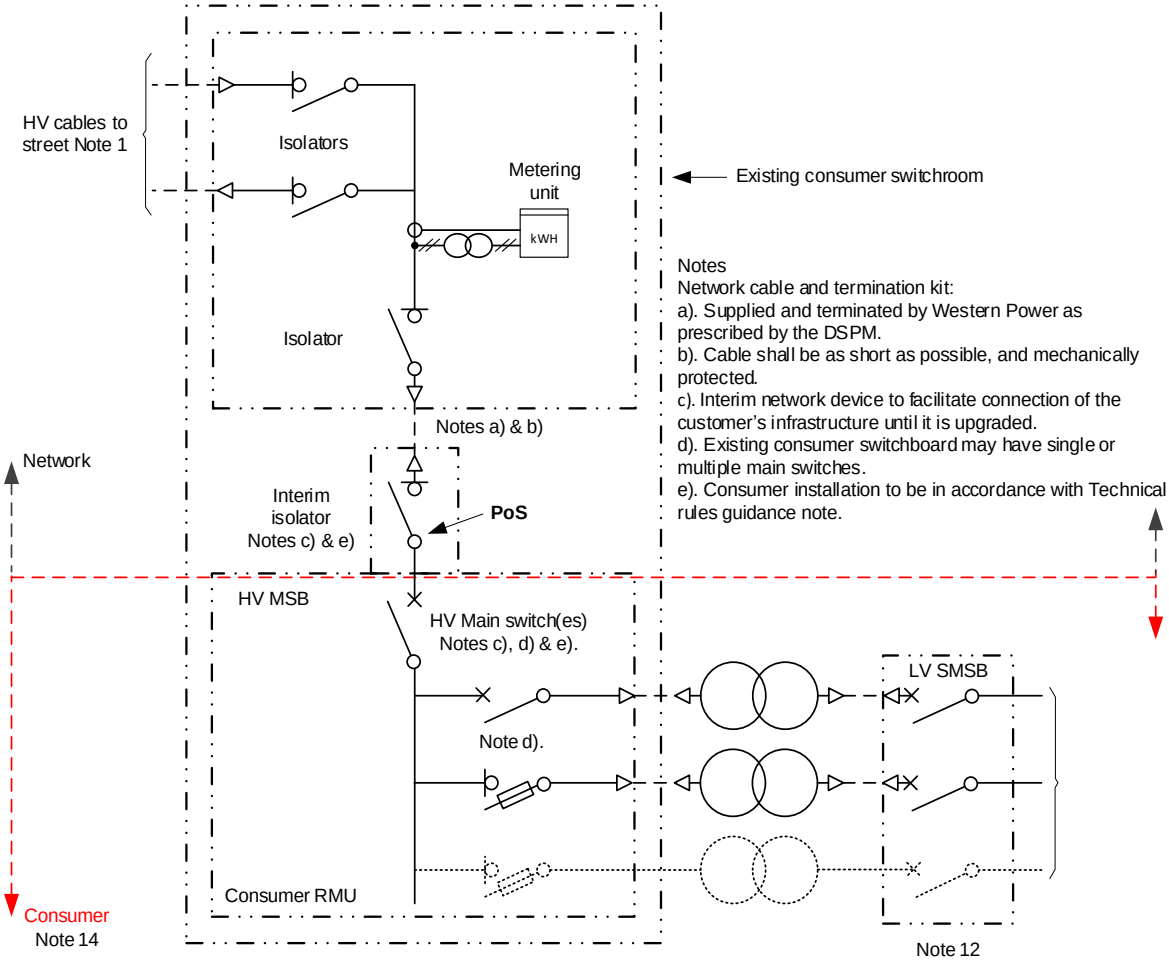

Notes
Network cable and termination kit:
a). Supplied and terminated by Western Power as prescribed by the DSPM.
b). Cable shall be as short as possible, and mechanically protected.
c). Interim network device to facilitate connection of the customer's infrastructure until it is upgraded.
d). Existing consumer switchboard may have single or multiple main switches.
e). Consumer installation to be in accordance with Technical rules guidance note.

Notes - Refer to DCCR 1-07-N

westernpower Distribution customer connection requirements	Consumer owned substation HV Metering Ground mounted indoor	Date # Apl 2021
		Rev # Initial
		Sheet # 2 of 4
EDM Visio 499 01 284	(HV Metering unit upgrade - Interim cable connection)	Draw # DCCR 1-07-3

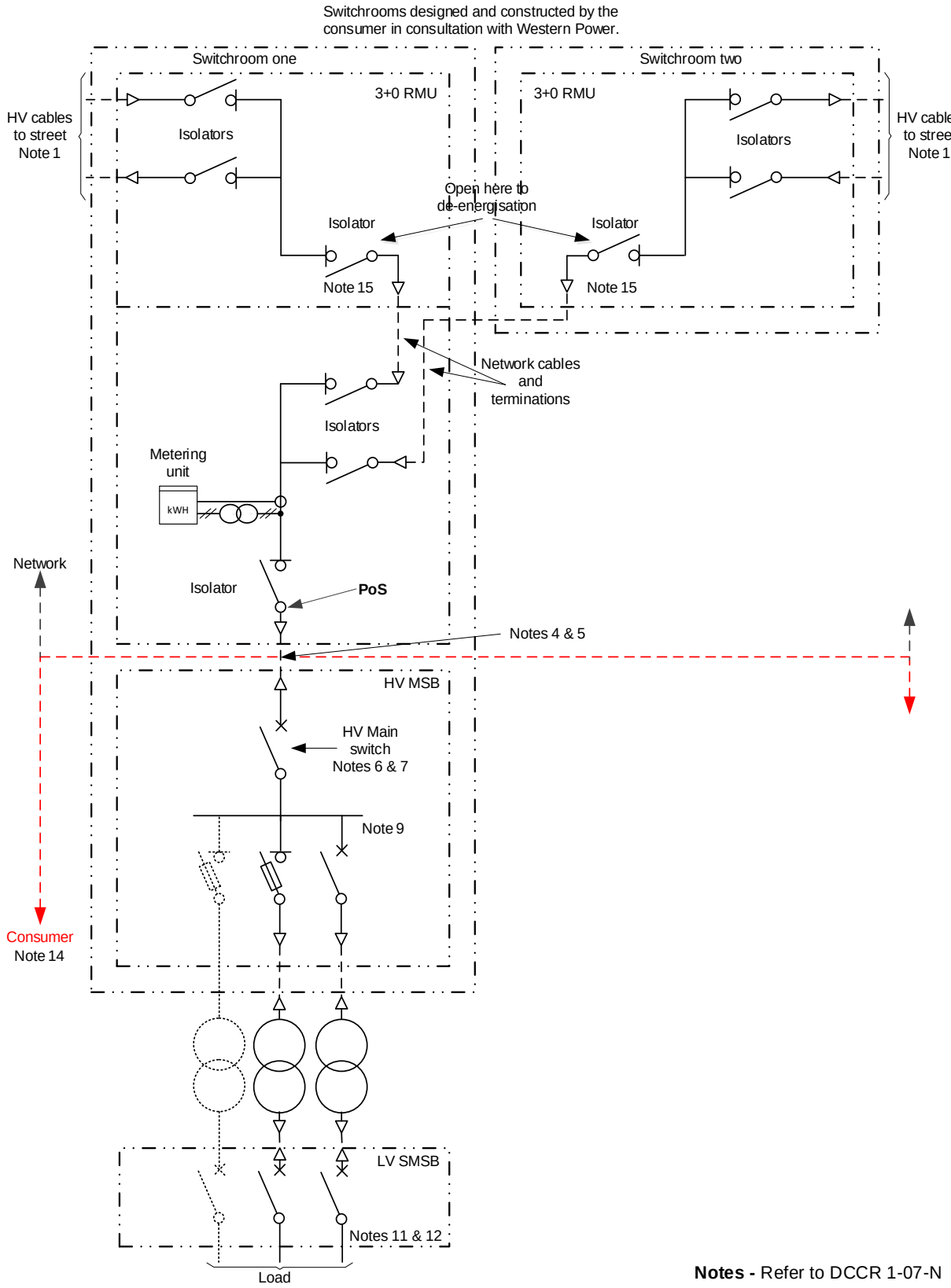

Notes - Refer to DCCR 1-07-N

westernpower Distribution customer connection requirements	Consumer owned substation HV Metering Ground mounted indoor (Cable connected) CBD switch room layout. Option A	Date # Sep 2020 Rev # Initial Sheet # 3 of 4
EDM Visio 499 01 284		Draw # DCCR 1-07-3

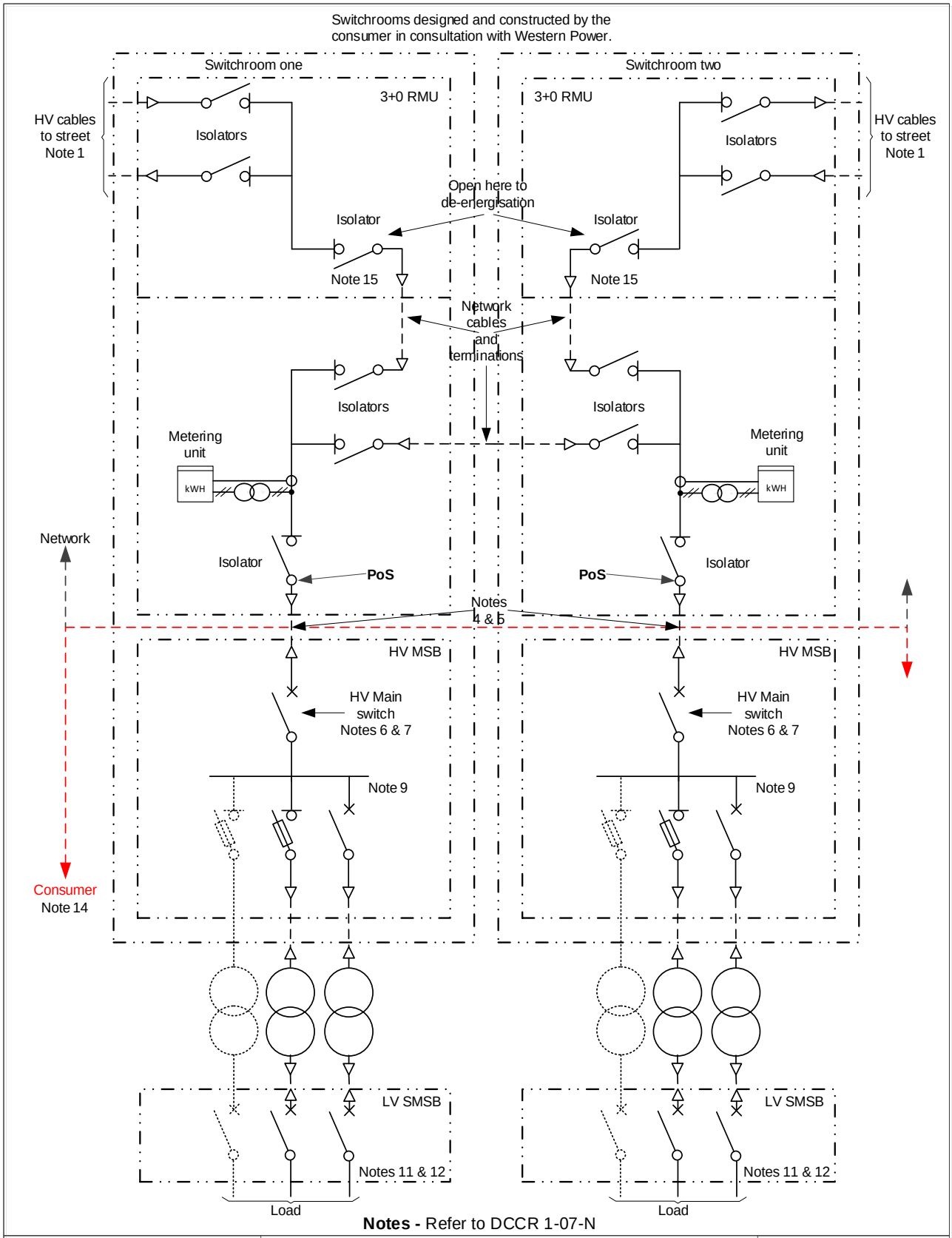

Notes - Refer to DCCR 1-07-N

westernpower Distribution customer connection requirements	Consumer owned substation HV Metering Ground mounted indoor (Cable connected) CBD switch room layout. Option B	Date # Sept 2020 Rev # Initial Sheet # 4 of 4
EDM Visio 499 01 284		Draw # DCCR 1-07-3

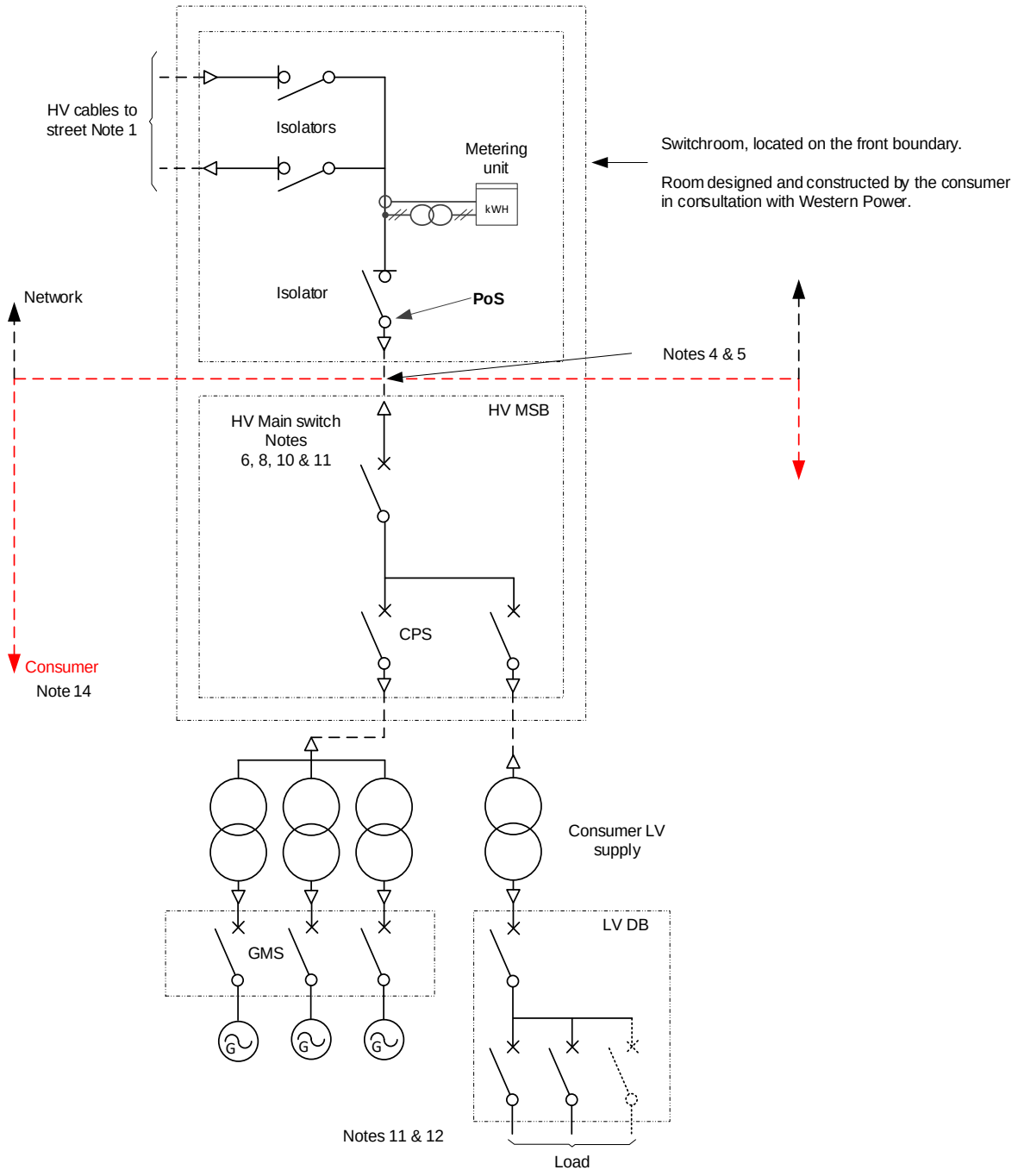

Notes - Refer to DCCR 1-07-N

westernpower Distribution customer connection requirements	Consumer owned substation HV Metering Ground mounted indoor (with generation)	Date # Aug 2018
		Rev # Initial
		Sheet # 1 of 1
EDM Visio 499 01 284		Draw # DCCS 1-07-4

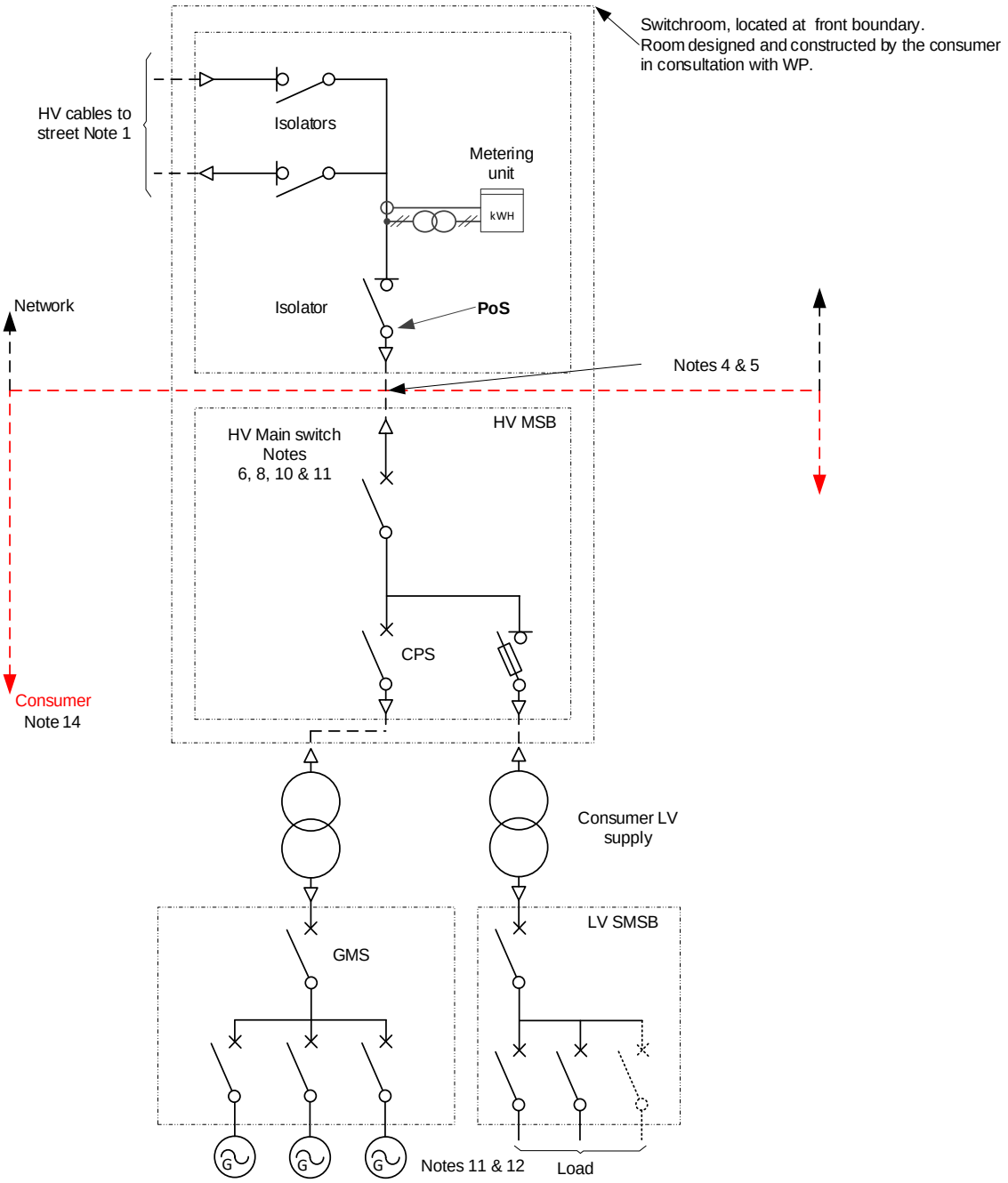

Notes - Refer to DCCR 1-07-N

westernpower Distribution customer connection requirements EDM Visio 499 01 284	Consumer owned substation HV Metering Ground mounted indoor (with generation) (alternative arrangement)	Date # Aug 2018 Rev # Initial Sheet # 1 of 1 Draw # DCCR 1-07-5

Notes DCCR 1-07-N

1. Network connection shall be selected from DCCR Section 9, based on the:
   a. Available overhead/underground distribution network and associated nominated supply voltage; and
   b. Consumers agreed maximum demand and allocated aggregate capacity of the consumer generation capacity at the point of supply(connection).
2. Western Power assets shall be located within 30m of the property boundary. Refer to the WASIR.
3. Installation of Western Power overhead assets inside a customer's property shall comply with: EDM #238 82 505 "*New distribution overhead constructions or upgrading distribution overhead assets inside properties.*"
4. Western Power cable:
   a. Supplied by Western Power as prescribed by the DSPM.
   b. The consumer is responsible for the cable termination kit and connection to their equipment.
5. Cable shall be as short as possible, and mechanically protected. Consumer shall provide spare ducts in accordance with the DSPM and the WASIR. Refer to DCCR design note 2. (Section 9)
6. Consumer protection system shall comply with the WAER, WASIR and the Technical rules.
7. Consumer main switch may be a circuit breaker or fuse switch.
8. Consumer's main switch shall be a circuit breaker.
9. Where a consumer's main switch is a circuit breaker, the consumer may have a circuit breakers or multiple fuse switches for transformer protection. Note fuse switches shall only be used where the transformer is ≤ 1.5MVA.
10. Refer to EDM # 324 19 002 *"User guide for connection of embedded generators from 30kVA up to 10MW."*
11. Consumer may have more than one main switch as per WAER, WASIR, AS/NZS 3000 and AS/NZS 4777.
12. CB shown as main switch (es) – for illustration purposes only
13. Neutral voltage displacement (NVD) protection:
    a. For HV connected consumers, NVD protection is required where generation/storage systems are installed. Refer to the Technical rules for specific requirements.
14. Drawings to be read in conjunction with applicable legislation, industry standards, codes, including the WAER and WASIR.
15. CBD options "A" and "B" are only applicable to sites that satisfy the following criteria:
    a. New installations/buildings located within the in Perth CBD boundary as defined by EDM 53277874; and
    b. Are HV metered; and with a
    c. Total load not to exceed 2MVA per feeder

westernpower Distribution customer connection requirements	Drawing notes for DCCR 1-07-1 to 1-07-5	Date # Sept 2020
		Rev # One
		Sheet # 1 of 1
EDM Visio 499 01 284		Draw # DCCR 1-07-N

9. HV network arrangements

9.1 Planning philosophies

The HV *network* arrangements shown in this section of the *requirements* are based on the following philosophies:

9.1.1 General

For all *voltages* the nominal maximum feeder *load* is defined as 390A for a first contingency outage. Given that the nominal maximum *load* under normal planning conditions is deemed to be 325A, the maximum permissible operational limit for feeder *loads* shall be calculated at 80%. (260A). to add with *load* restoration in the event of an unplanned event.

Note that other feeder *loads* (and hence HV *network* arrangements) may be possible if alternative designs are used – e.g., duplicate feeder cables. However, these are not reflected in this document.

9.1.2 6.6 KV philosophy

Elements of the SWIN retain a 6.6 kV HV *distribution network* and associated supply and connection arrangements. Shared feeders with these *network*s are not based on a 'Y' configuration philosophy. The maximum permissible *loading* on a shared feeder is 260A or 3MVA.

Arrangements are based on limiting the maximum discrete *load* on a feeder to 2MVA, leaving 1MVA available for other *loads*. In practice, the designer will need to review specific situations and vary the *load* ranges for a particular arrangement taking into account existing and potential *loads*.

This philosophy results in the following arrangements:

a) Discrete *loads* up to 2MVA - The *load* can be supplied from a single shared feeder.

b) Discrete *loads* above 2MVA up to 4MVA - The *load* must be evenly split across two switchboards (with a maximum of 2MVA per switchboard). Each switchboard can be supplied from a separate shared feeder, with a normally open point between the switchboards (i.e., two feeders operating radially). Note that discrete *loads* above 2MVA up to 4.5MVA could also be supplied from a dedicated feeder, however, this arrangement is not shown.

c) Discrete *loads* above 4MVA - Such *loads* must be assessed on an individual basis.

   Note that the arrangements shown for 6.6kV are suitable for future conversion to 22kV based on the 'Y' configuration.

9.1.3 11 KV philosophy

The 11kV HV *network* arrangement for shared feeders is not based on 'Y' configuration.

The maximum permissible *loading* on a shared feeder is 260A or 5MVA. Arrangements are based on limiting the maximum discrete *load* on a feeder to 4MVA, leaving 1MVA available for other *loads*. In practice, the designer will need to review specific situations and vary the *load* ranges for a particular arrangement taking into account existing and potential *loads*.

This philosophy results in the following arrangements:

a) Discrete *loads* up to 4MVA - the *load* can be supplied from a single shared feeder.

b) Discrete *loads* above 4MVA up to 8MVA - the *load* must be evenly split across two switchboards (with a maximum of 4MVA per switchboard). Each switchboard can be supplied from a separate shared feeder, with a normally open point between the switchboards (i.e., two feeders operating radially).

c) Note that discrete *loads* above 4MVA up to 7.5MVA could also be supplied from a dedicated feeder, however, this arrangement is not shown.

d) Discrete *loads* above 8MVA - such *loads* must be assessed on an individual basis. Note that the arrangements shown for 11kV are suitable for future conversion to 22kV based on the 'Y' configuration.

9.1.4 22 KV philosophy

The 22kV HV *network* arrangement for shared feeders is based on the 'Y' configuration specified in Report "ESD 65/93 22kV Feeder Design" (EDM 26822564). The maximum permissible *load* on each leg of the 'Y' is 130A or 5MVA. Arrangements are based on limiting the maximum discrete *load* on one leg of the 'Y' for a shared feeder to 4MVA, leaving 1MVA available for other *loads*. In practice, the designer will need to review specific situations and vary the *load* ranges for a particular arrangement taking into account existing and potential *loads*.

Dedicated feeders can be *loaded* to 390A or 15MVA.

This philosophy results in the following arrangements:

a) Discrete *loads* up to 4MVA - The *load* can be supplied from one leg of a shared 'Y' configured feeder.

b) Discrete *loads* above 4MVA up to 8MVA - The *load* must be evenly split across two switchboards (with a maximum of 4MVA per switchboard). Each switchboard can be supplied from one leg of a shared 'Y' configured feeder, with a normally open point between the switchboards (the two legs can be from the same or different feeders). Note that where this *load* is to be supplied from a feeder that is not in the 'Y' configuration, it may be acceptable to operate with the normally open point closed until such time as the 'Y' configuration is implemented on the feeder.

c) Discrete *loads* above 8MVA up to 15MVA - The *load* must be supplied from a dedicated feeder. Such *loads* will have limited backup unless a second dedicated feeder is provided.

d) Discrete *loads* above 15MVA - Such *loads* must be assessed on an individual basis. It is generally preferable that they be supplied from the *transmission network* rather than the *distribution network*.

9.1.5 33 KV philosophy

For 33kV, the same philosophy and *loading* levels are to be used as for those specified for 22kV.

9.2 Design notes

The following design notes are referenced on the HV *network* arrangement drawings:

9.2.1 Note 1

For all types of extensions or *augmentation* work, excluding work to rectify existing *network* deficiencies (e.g., defective equipment, power quality correction or transformer *overload*), underground construction shall be considered and adopted, wherever possible even if an overhead option would be acceptable.

Where a transformer is protected by dropout fuses (DOF's), the *substation* arrangement nominated must have sufficient *site* area for the installation of HV switchgear. The larger *site* area provides the required level of flexibility to install HV switchgear if retrospective undergrounding occurs in the future.

This HV switchgear need not be installed initially where the transformer is supplied via DOF's.

In cases where the *consumer* requires the transformer/s to be installed more than 30 metres from the *property boundary*, Western Power will not install HV switchgear this far into the *consumer's* property regardless of whether retrospective undergrounding occurs or not in the future (see note 2 below). Therefore, in these cases, the *consumer* can't be supplied off DOF's and HV switchgear must be installed from the outset.

Generally no provision is to be made for retrospective undergrounding in rural areas. Therefore, where a transformer is protected by DOF's, the *substation* arrangement nominated need not include additional *site* area for the installation of future HV switchgear.

9.2.2 Note 2

All HV feeder cables shall be fully fault rated. HV feeder cables on the *consumer's* property shall be provided with extra mechanical protection within a registered easement. They shall be kept as short as possible, preferably 5 metres and in any case not more than 30 metres from the *property boundary*. Where HV feeder cables run off Western Power's standard alignment and through the *consumer's* property, the associated HV feeder *network* is deemed to be at a greater risk. The distance of 30 metres has been chosen as the maximum acceptable risk.

Where HV switchgear is required and the *consumer* requires the transformer/s to be installed more than 30 metres from the *property boundary*, HV switchgear must be installed separately from the transformers and within 5 metres of the *property boundary*.

9.2.3 Note 3

Transformer cables shall always be protected by a fuse and hence do not need to be fault rated. There is no limitation on the length which transformer cables can run into the *consumer's* property. Protection is as shown on the appropriate fuse charts and *substation* arrangement drawings.

9.2.4 Note 4

Where a transformer is protected by a DOF installed directly off the street mains, the need for an adjacent pole top switches (PTS/s) in the street mains is dependent on the transformer size and neighbouring *network* configuration. This shall be determined on the basis that a maximum of three transformers or a maximum capacity of 1000kVA is to be installed in between PTS's. Generally, the minimum transformer capacity installed between PTS's should not be less than 630kVA (provided that this does not conflict with the maximum allowances given above).

9.2.5 Note 5

Where a transformer is protected by a DOF installed directly off the street mains, there is no need for a combination PTS (i.e., a PTS installed between the street mains and the DOF). When the transformer cable length exceeds the critical length for ferroresonance and an adjacent PTS/s cannot be used for three phase energisation, then the transformer should be energised via the DOF with a *load* bank connected to the transformer.

9.2.6 Note 6

There are a number of instances where a RMU fuse switch must be used to protect the transformer as DOF's are not acceptable (e.g., a 1MVA transformer at 6.6kV). In such cases, where a non-MPS transformer of smaller size (which could be protected by DOF's) is initially installed on an overhead HV *network* and that there is a possibility that a future upgrade to the larger size transformer may occur, a fuse switch should be installed from the outset. However, if there is no intention ever to upgrade to the larger transformer, DOF's can be used.

9.2.7 Note 7

HV *metering* shall be in accordance with Western Power's *requirements*. In metro situations, ground mounted *metering* units are to be used. In rural situations, pole mounted *metering* units may be used subject to Western Power approval. Where more than one HV *metering* unit is installed, all *metering* is to be at the one combined location.

9.2.8 Note 8

For Western Power owned *substations*, a maximum of two transformers can be housed in one enclosure, with transformer pairs fire segregated.

9.2.9 Note 9

Dual fire segregated switchboards are required for *loads* in excess of 4MVA.

9.2.10 Note 10

Consumer's transformer controlled by a combination fuse switch shall not exceed 1500kVA. Transformers larger than this shall be controlled by a circuit breaker.

9.2.11 Note 11

For *consumer* owned *substations* where Western Power has a cable (or existing bus) section switch/es between two switchboards and operates with the section open (i.e., two feeders/feeder legs operating radially), mechanical interlocking is required to prevent closed ring operation via the *consumer's* switchboards while Western Power's section switch is open. If necessary, paralleling of the *consumer's* switchboards is only permitted when Western Power's bus section switch is closed and only under the direction of Western Power.

9.2.12 Note 12

In *consumer* owned *substations* where Western Power has a cable (or existing bus) section switch/es between two switchboards and operates with the section closed (i.e., two feeders operating closed ring), paralleling of the *consumer's* switchboards is only permitted when Western Power's section switch is closed. Mechanical interlocking is required to prevent closed ring operation via the *consumer's* switchboards while Western Power's section switch is open.

9.2.13 Note 13

Where a *consumer* is supplied from a dedicated feeder/s, consideration must be given to maintenance of the circuit and busbar at the zone *substation*. Where the *consumer* selects or is provided with a dedicated connection arrangement, the impact of unplanned outages together with supply reliability expectations should be discussed with the *applicant*.

9.2.14 Note 14

The general *metering* principle for *loads* less than 2 MVA, is that such *loads* shall be *metered* at LV.

This principle is in place to ensure measurement accuracy and Metering Code compliance.

A *consumer* may have specific equipment, *load* and *metering requirements* below the agreed threshold that, subject to *consumer* justification, compliant *network* equipment availability and subsequent *network* approval, could be *metered* at HV.

Where approved for connection at HV, the following principles shall be used to select suitable CTs *metering* equipment

a) CT operating range 20 – 175% of nominal current rating
b) CTs to have extended range of 200%
c) CTs to have a Class classification of 0.5S
d) CT burdens - min of 5VA
e) FS 10 - Desirable

Western Power's Metering Technical Services will nominate CT ratios of 10/20/50/100/200:1 to achieve continuous coverage for all *loads*:

Proposed taps	Ext Range
10	20
20	40
50	100
100	200
200	400

Metering units with ratios of 100-200/1A are used for HV *loads* within the range of 2000-4000 kVA

9.3 HV network arrangement drawings

9.3.1 Drawing index

DCCR Section 9	Title
General	
DCCR 2-00-1	HV network arrangement Legend
Overhead district and sole use	
DCCR 2-01-1	6.6kV District and sole use substations - Typical metro (page 1)
DCCR 2-01-2	6.6kV District and sole use substations - Typical metro (page 2)
DCCR 2-05-1	11kV District and sole use substations - Typical metro (page 1)
DCCR 2-05-2	11kV District and sole use substations - Typical metro (page 2)
DCCR 2-05-3	11kV District and sole use substations - Typical metro (page 3)
DCCR 2-09-1	22kV District and sole use substations - Typical metro (page 1)
DCCR 2-09-2	22kV District and sole use substations - Typical metro (page 2)
DCCR 2-09-3	22kV District and sole use substations - Typical metro (page 3)
DCCR 2-10-1	22kV District and sole use substations - Typical rural (page 1)
DCCR 2-10-2	22kV District and sole use substations - Typical rural (page 2)
DCCR 2-15-1	33kV District and sole use substations - Typical rural (page 1)
Overhead consumer owned	
DCCR 2-02-1	6.6kV Consumer owned substation - Typical metro (page 1)
DCCR 2-02-2	6.6kV Consumer owned substation - Typical metro (page 2)
DCCR 2-06-1	11kV Consumer owned substation - Typical metro (page 1)
DCCR 2-06-2	11kV Consumer owned substation - Typical metro (page 2)
DCCR 2-11-1	22kV Consumer owned substation - Typical metro (page 1)
DCCR 2-11-2	22kV Consumer owned substation - Typical metro (page 2)
DCCR 2-12-1	22kV Consumer owned substation - Typical rural (page 1)
DCCR 2-12-2	22kV Consumer owned substation - Typical rural (page 2)
DCCR 2-16-1	33kV Consumer owned substation - Typical rural (page 1)
DCCR 2-16-2	33kV Consumer owned substation - Typical rural (page 2)
Underground district and sole use	
DCCR 2-03-1	6.6kV District and sole use substations - Typical metro (page 1)
DCCR 2-03-2	6.6kV District and sole use substations - Typical metro (page 2)
DCCR 2-07-1	11kV District and sole use substations - Typical metro (page 1)
DCCR 2-07-2	11kV District and sole use substations - Typical metro (page 2)
DCCR 2-07-3	11kV District and sole use substations - Typical metro (page 3)
DCCR 2-13-1	22kV District and sole use substations - Typical metro or rural (page 1)
DCCR 2-13-2	22kV District and sole use substations - Typical metro or rural (page 2)
DCCR 2-13-3	22kV District and sole use substations - Typical metro or rural (page 3)
Underground consumer owned	
DCCR 2-04-1	6.6kV Consumer owned substation - Typical metro (page 1)
DCCR 2-04-2	6.6kV Consumer owned substation - Typical metro (page 2)
DCCR 2-08-1	11kV Consumer owned substation - Typical metro (page 1)
DCCR 2-08-2	11kV Consumer owned substation - Typical metro (page 2)
DCCR 2-08-3	11kV Consumer owned substation - Metro CBD indoor options A and B (page 3)
DCCR 2-14-1	22kV District and sole use substations - Typical metro or rural (page 1)
DCCR 2-14-2	22kV District and sole use substations - Typical metro or rural (page 2)

9.3.2 Drawing revision list

DSM Section 2	DCCR Section 9	Title
General		
DSM 2-00 sht 1 of 1	DCCR 2-00-1	HV network arrangement Legend
Overhead district and sole use		
DSM 2-01 sht 1 of 2	DCCR 2-01-1	6.6kV District and sole use substations - Typical metro
DSM 2-01 sht 2 of 2	DCCR 2-01-2	6.6kV District and sole use substations - Typical metro
DSM 2-05 sht 1 of 3	DCCR 2-05-1	11kV District and sole use substations - Typical metro
DSM 2-05 sht 2 of 3	DCCR 2-05-2	11kV District and sole use substations - Typical metro
DSM 2-05 sht 3 of 3	DCCR 2-05-3	11kV District and sole use substations - Typical metro
DSM 2-09 sht 1 of 3	DCCR 2-09-1	22kV District and sole use substations - Typical metro
DSM 2-09 sht 2 of 3	DCCR 2-09-2	22kV District and sole use substations - Typical metro
DSM 2-09 sht 3 of 3	DCCR 2-09-3	22kV District and sole use substations - Typical metro
DSM 2-10 sht 1 of 2	DCCR 2-10-1	22kV District and sole use substations - Typical rural
DSM 2-10 sht 2 of 2	DCCR 2-10-2	22kV District and sole use substations - Typical rural
DSM 2-15 sht 1 of 1	DCCR 2-15-1	33kV District and sole use substations - Typical rural
Overhead consumer owned		
DSM 2-02 sht 1 of 2	DCCR 2-02-1	6.6kV Consumer owned substation - Typical metro
DSM 2-02 sht 2 of 2	DCCR 2-02-2	6.6kV Consumer owned substation - Typical metro
DSM 2-06 sht 1 of 2	DCCR 2-06-1	11kV Consumer owned substation - Typical metro
DSM 2-06 sht 2 of 2	DCCR 2-06-2	11kV Consumer owned substation - Typical metro
DSM 2-11 sht 1 of 2	DCCR 2-11-1	22kV Consumer owned substation - Typical metro
DSM 2-11 sht 2 of 2	DCCR 2-11-2	22kV Consumer owned substation - Typical metro
DSM 2-12 sht 1 of 1	DCCR 2-12-1	22kV Consumer owned substation - Typical rural
	DCCR 2-12-2	22kV Consumer owned substation - Typical rural
DSM 2-16 sht 1 of 1	DCCR 2-16-1	33kV Consumer owned substation - Typical rural
	DCCR 2-16-2	33kV Consumer owned substation - Typical rural
Underground district and sole use		
DSM 2-03 sht 1 of 2	DCCR 2-03-1	6.6kV District and sole use substations - Typical metro
DSM 2-03 sht 2 of 2	DCCR 2-03-2	6.6kV District and sole use substations - Typical metro
DSM 2-07 sht 1 of 3	DCCR 2-07-1	11kV District and sole use substations - Typical metro
DSM 2-07 sht 2 of 3	DCCR 2-07-2	11kV District and sole use substations - Typical metro
DSM 2-07 sht 3 of 3	DCCR 2-07-3	11kV District and sole use substations - Typical metro
DSM 2-13 sht 1 of 3	DCCR 2-13-1	22kV District and sole use substations - Typical metro or rural
DSM 2-13 sht 2 of 3	DCCR 2-13-2	22kV District and sole use substations - Typical metro or rural
DSM 2-13 sht 3 of 3	DCCR 2-13-3	22kV District and sole use substations - Typical metro or rural
Underground consumer owned		
DSM 2-04 sht 1 of 2	DCCR 2-04-1	6.6kV Consumer owned substation - Typical metro
DSM 2-04 sht 2 of 2	DCCR 2-04-2	6.6kV Consumer owned substation - Typical metro
DSM 2-08 sht 1 of 2	DCCR 2-08-1	11kV Consumer owned substation - Typical metro
DSM 2-08 sht 2 of 2	DCCR 2-08-2	11kV Consumer owned substation - Typical metro
NA	DCCR 2-08-3	11kV Consumer owned substation - CBD indoor options A and B
DSM 2-14 sht 1 of 2	DCCR 2-14-1	22kV District and sole use substations - Typical metro or rural
DSM 2-14 sht 2 of 2	DCCR 2-14-2	22kV District and sole use substations - Typical metro or rural

9.3.3 Drawing legend

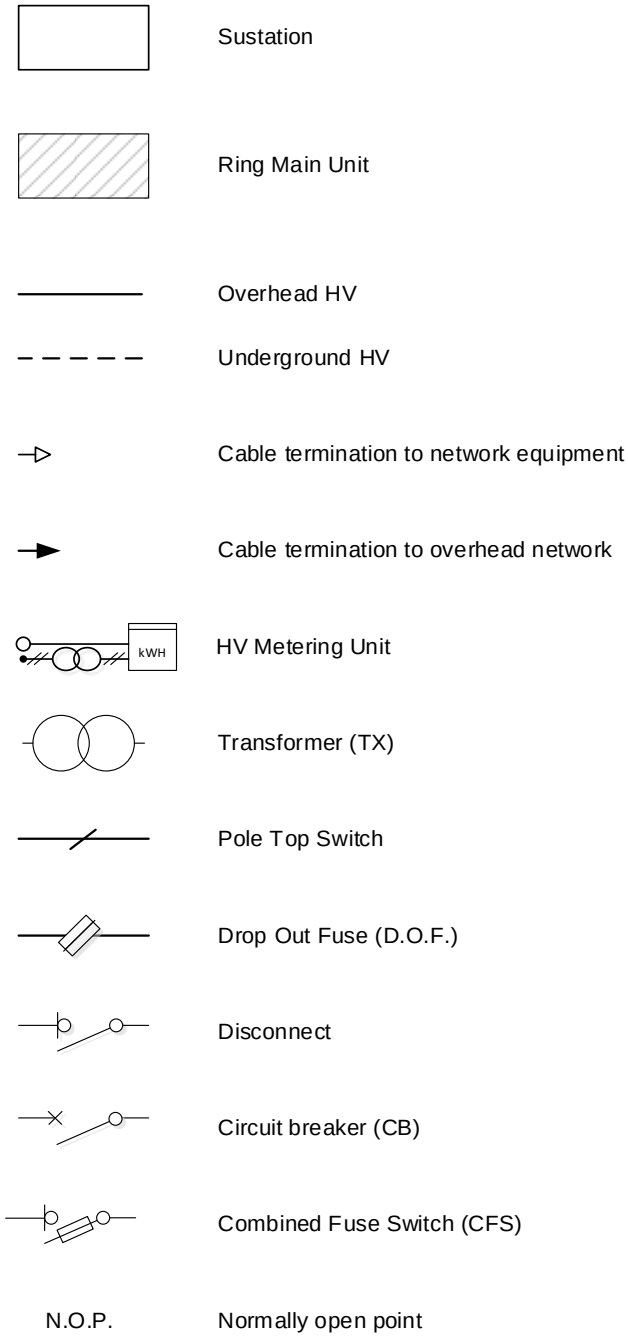

Drawings to be read in conjunction with applicable legislation, industry standards, codes including the WAER and WASIR

westernpower Distribution customer connection requirements EDM Visio 498 91 124	HV network arrangements Legend	Date # Aug 2018 Rev # Initial Sheet # 1 of 1 Draw # DCCR 2-00-1

9.3.4 Overhead district and sole use

Number of transformers	Transformer rating (kVA)	Comments	HV system arrangement	DSPM section 3 substation drawings
One	Up to 630 MPS	Substation located within 30m of the property boundary Note 2	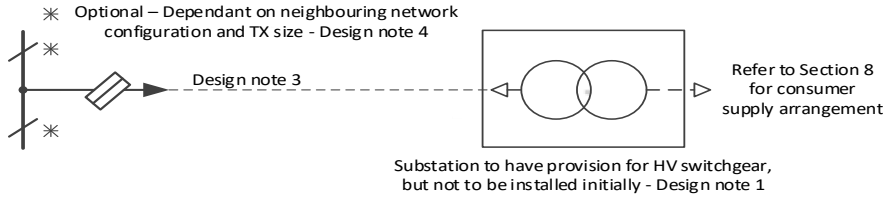	Refer to the DSPM for substation technical and engineering details
One	Up to 630 MPS	Substation located more than 30m from the property boundary Note 2	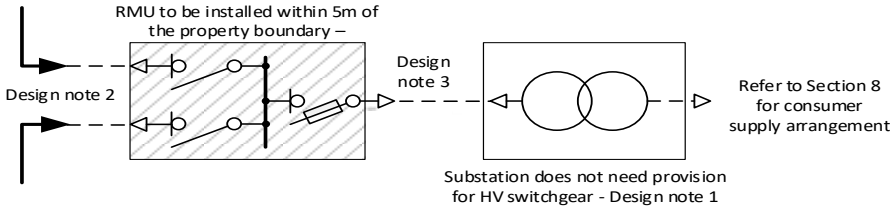	
One	315 to 1000 Non MPS	Substation located within 30m of the property boundary Note 2 See Note 6 regarding the use of drop out fuses as an alternative for this arrangement	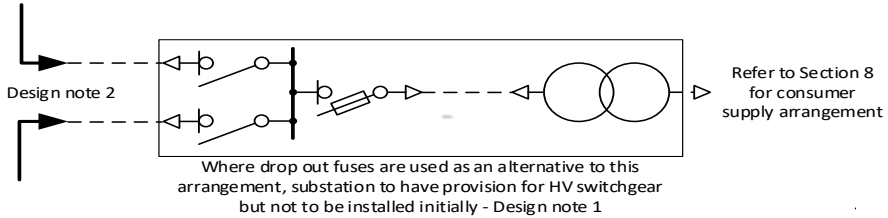	
One	315 to 1000 Non MPS	Substation located more than 30m from the property boundary Note 2	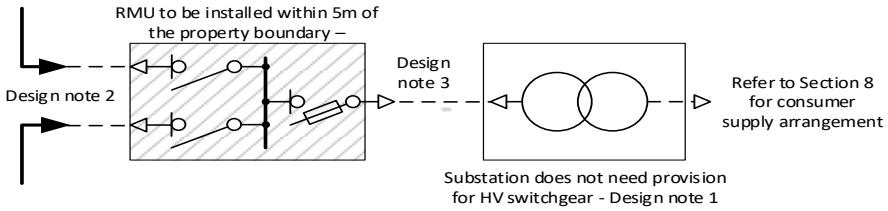	

Drawings to be read in conjunction with applicable legislation, industry standards, codes including the WAER and WASIR

westernpower

Distribution customer connection requirements

EDM Visio 498 91 124

6.6kV Overhead supply
District and sole use substations

Typical metro

Date #	Aug 2018
Rev #	Initial
Sheet #	1 of 2
Draw #	DCCR 2-01-1

Transformer #	Transformer rating (kVA)	HV system arrangement	DSPM section 3 substation drawings
Comments			
Two	630 to 1000 Non-MPS	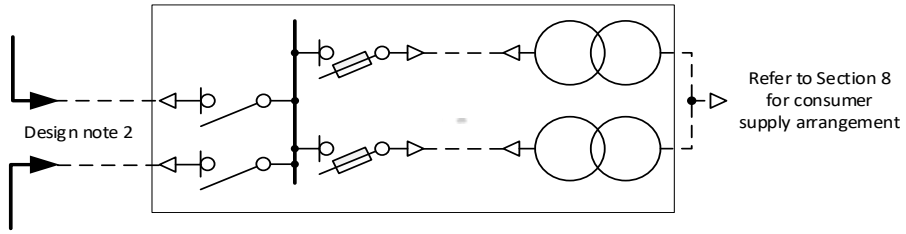	Refer to the DSPM for substation technical and engineering details
Substation located within 30m of the property boundary Note 2. Where one large transformer will provide the load, the consumer must pay the full cost difference between this and the single transformer arrangement			
Two	630 to 1000 Non-MPS	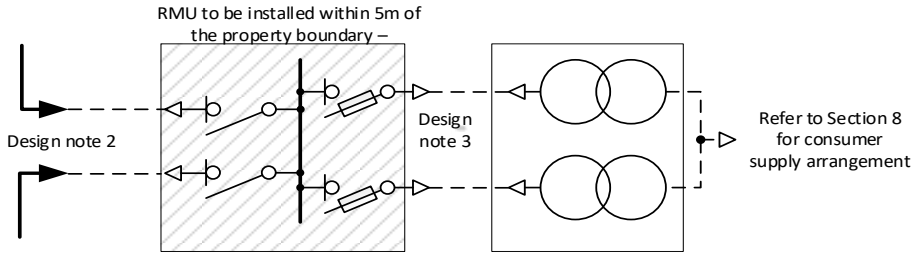	
Substation located more than 30m from the property boundary Note 2. Where one large transformer will provide the load, the consumer must pay the full cost difference between this and the single transformer arrangement			

Drawings to be read in conjunction with applicable legislation, industry standards, codes including the WAER and WASIR

westernpower

Distribution customer connection requirements

EDM Visio 498 91 124

6.6kV Overhead supply
District and sole use substations

Typical metro

Date #	Aug 2018
Rev #	Initial
Sheet #	2 of 2
Draw #	DCCR 2-01-2

Number of transformers	Transformer rating (kVA)	HV system arrangement	DSPM section 3 substation drawings
Comments			
One	Up to 630 MPS	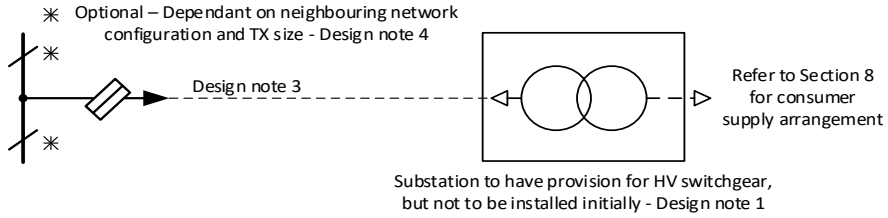	Refer to the DSPM for substation technical and engineering details
Substation located within 30m of the property boundary Note 2			
One	Up to 630 MPS	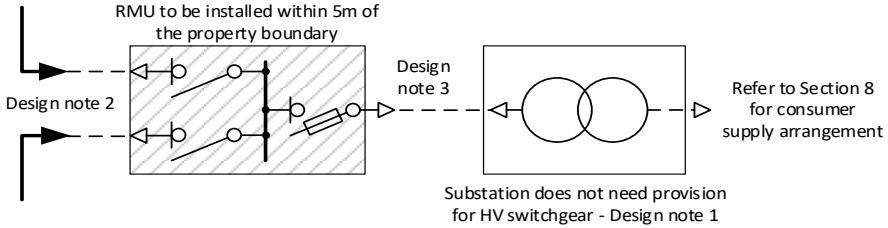	
Substation located more than 30m from the property boundary Note 2			
One	315 to 1000 Non MPS	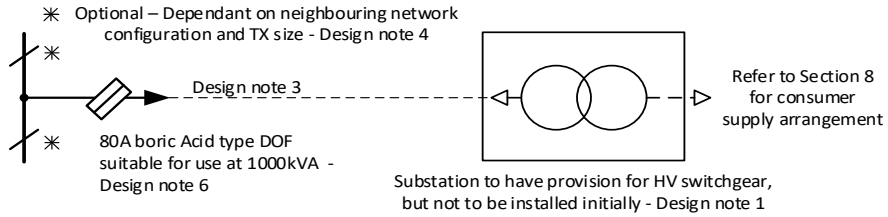	
Substation located within 30m of the property boundary Note 2			
One	315 to 1000 Non MPS	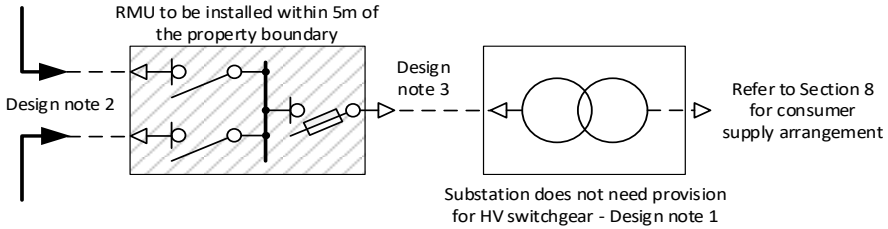	
Substation located more than 30m from the property boundary Note 2			

Drawings to be read in conjunction with applicable legislation, industry standards, codes including the WAER and WASIR

westernpower

Distribution customer connection requirements

EDM Visio 498 91 124

11kV Overhead supply
District and sole use substations

Typical metro

Date # Aug 2018
Rev # Initial
Sheet # 1 of 3
Draw # DCCR 2-05-1

Transformer #	Transformer rating (kVA)	HV system arrangement	DSPM section 3 substation drawings
Comments			
Two	630 to 1000 Non-MPS	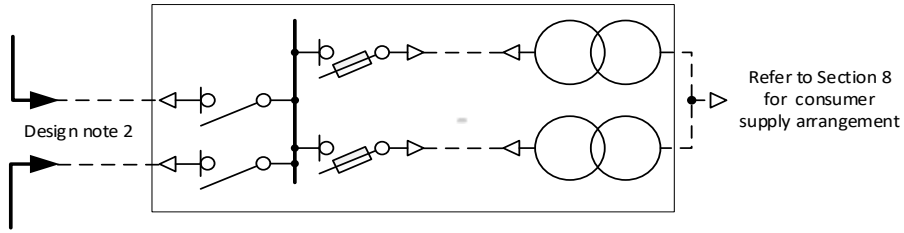	Refer to the DSPM for substation technical and engineering details
Substation located within 30m of the property boundary Note 2. Where one large transformer will provide the load, the consumer must pay the full cost difference between this and the single transformer arrangement			
Two	630 to 1000 Non-MPS	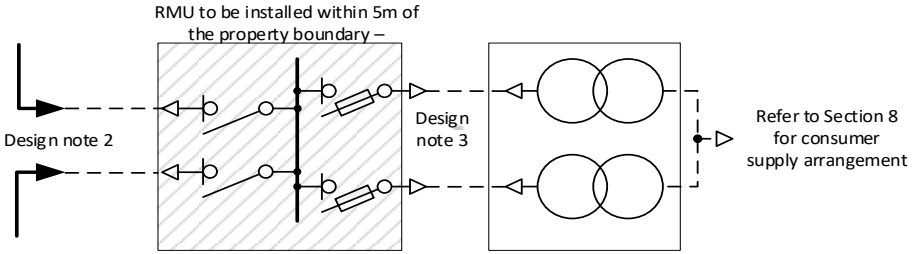	
Substation located more than 30m from the property boundary Note 2. Where one large transformer will provide the load, the consumer must pay the full cost difference between this and the single transformer arrangement			
Three or Four	630 to 1000 Non-MPS	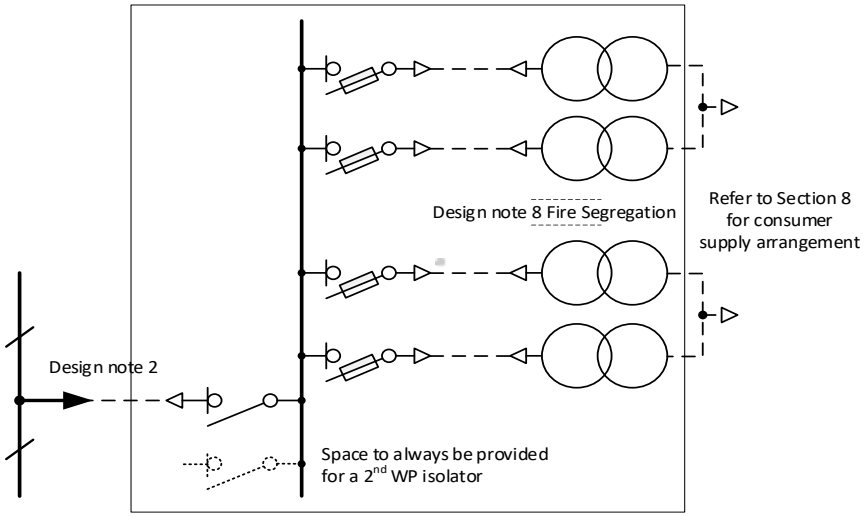	
Where the transformers are to be located within 30m of the property boundary, the HV switchroom can be adjacent to the transformers. However where the transformers are to be located more than 30m from the boundary the HV switchboard is to be located separately from the transformers and should be within 5m of the boundary. Where less transformers will provide the load, the consumer must pay the full cost of the difference between this and the minimum arrangement.			

Drawings to be read in conjunction with applicable legislation, industry standards, codes including the WAER and WASIR

westernpower

Distribution customer connection requirements

EDM Visio 498 91 124

11kV Overhead supply
District and sole use substations

Typical metro

Date #	Aug 2018
Rev #	Initial
Sheet #	2 of 3
Draw #	DCCR 2-05-2

Transformer #	Transformer rating (kVA)	HV system arrangement	DSPM section 3 substation drawings
Comments			Refer to the DSPM for substation technical and engineering details
Three or Four	630 to 1000 Non-MPS	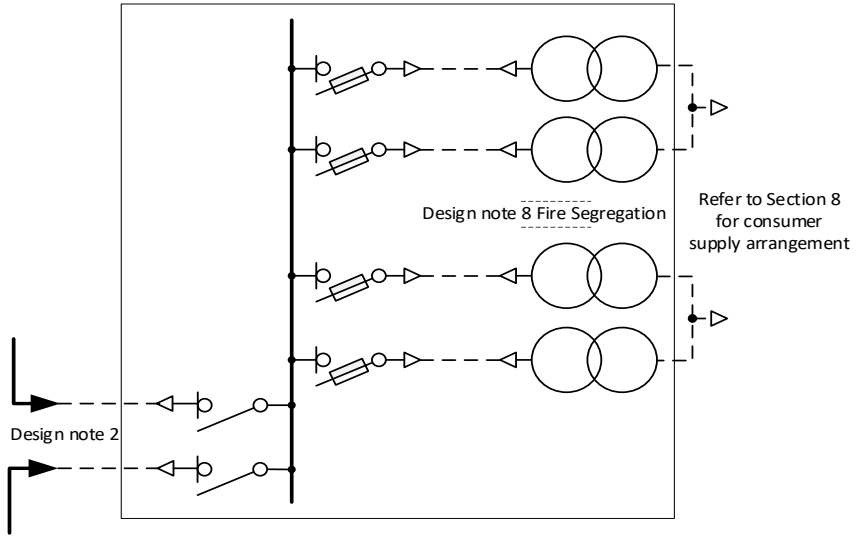	
Alternative to the previous arrangement where the consumer is prepared to pay the full cost of the second cable and isolator for improved security			

Drawings to be read in conjunction with applicable legislation, industry standards, codes including the WAER and WASIR

westernpower

Distribution customer connection requirements

EDM Visio 498 91 124

11kV Overhead supply
District and sole use substations
Typical metro

Date #	Aug 2018
Rev #	Initial
Sheet #	3 of 3
Draw #	DCCR 2-05-3

Number of transformers	Transformer rating (kVA)	Comments	HV system arrangement	DSPM section 3 substation drawings
One	Up to 630 MPS	Substation located within 30m of the property boundary Note 2	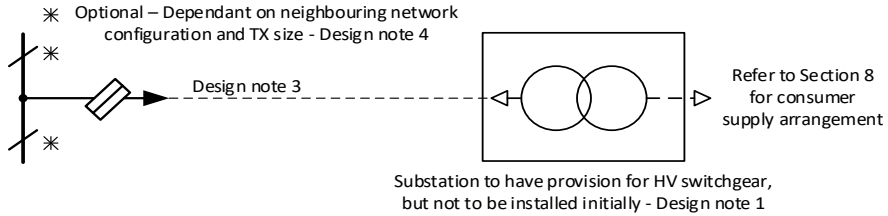	Refer to the DSPM for substation technical and engineering details
One	Up to 630 MPS	Substation located more than 30m from the property boundary Note 2	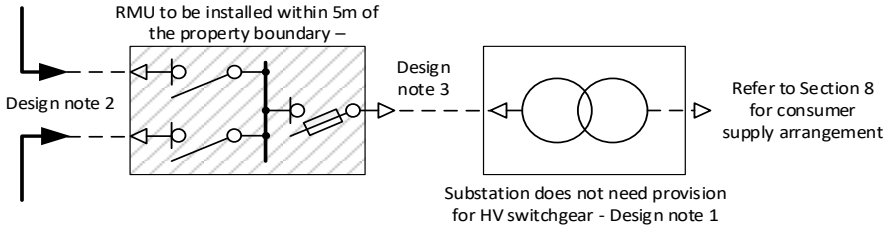	
One	315 to 1000 Non MPS	Substation located within 30m of the property boundary Note 2	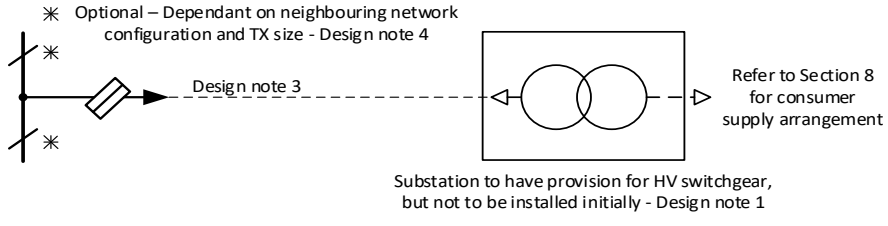	
One	315 to 1000 Non MPS	Substation located more than 30m from the property boundary Note 2	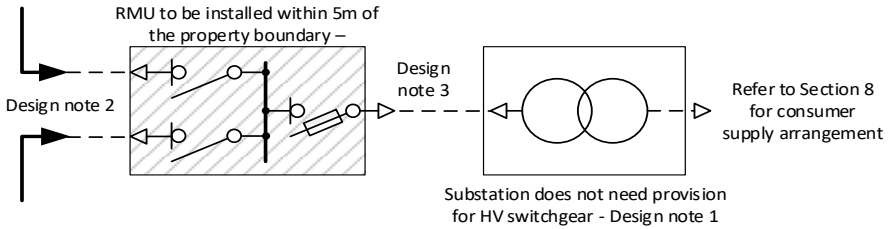	

Drawings to be read in conjunction with applicable legislation, industry standards, codes including the WAER and WASIR

westernpower

Distribution customer connection requirements

EDM Visio 498 91 124

22kV Overhead supply
District and sole use substations

Typical metro

Date #	Aug 2018
Rev #	Initial
Sheet #	1 of 3
Draw #	DCCR 2-09-1

Transformer #	Transformer rating (kVA)	HV system arrangement	DSPM section 3 substation drawings
Comments			
Two	630 to 1000 Non-MPS	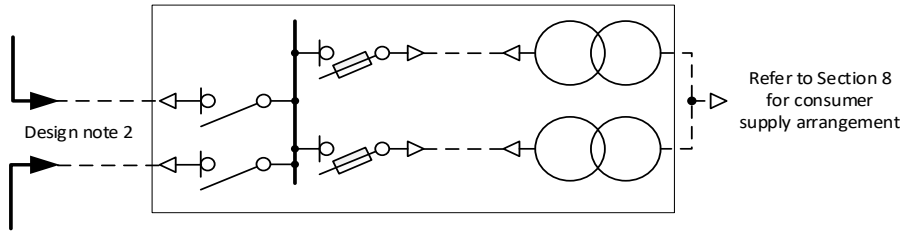	Refer to the DSPM for substation technical and engineering details
Substation located within 30m of the property boundary Note 2. Where one large transformer will provide the load, the consumer must pay the full cost difference between this and the single transformer arrangement			
Two	630 to 1000 Non-MPS	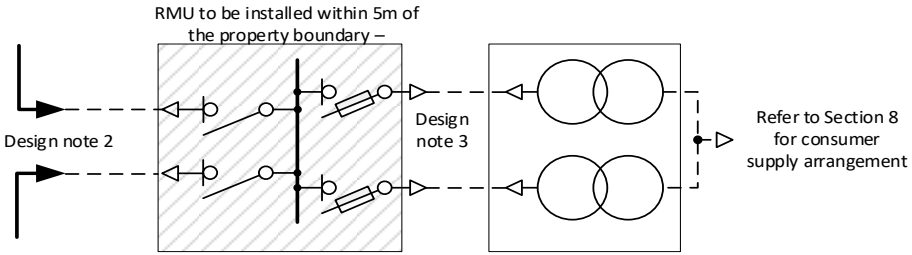	
Substation located more than 30m from the property boundary Note 2. Where one large transformer will provide the load, the consumer must pay the full cost difference between this and the single transformer arrangement			
Three or Four	630 to 1000 Non-MPS	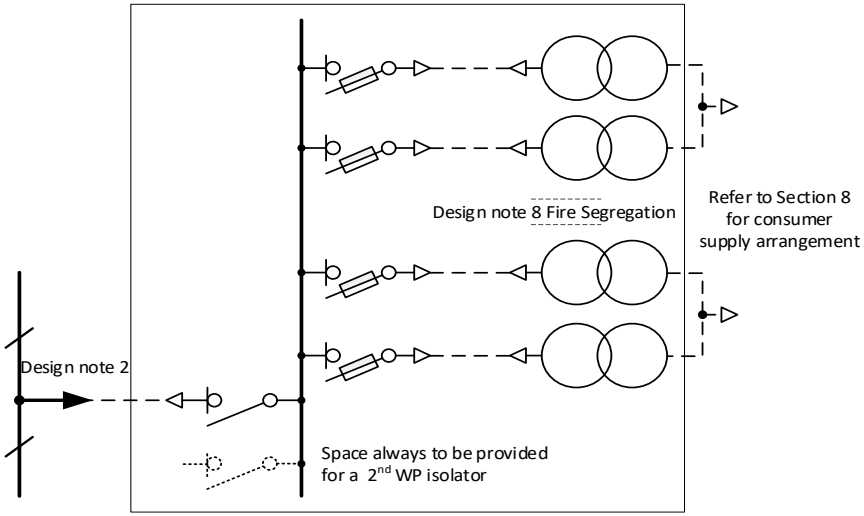	
Where the transformers are to be located within 30m of the property boundary, the HV switchroom can be adjacent to the transformers. However where the transformers are to be located more than 30m from the boundary the HV switchboard is to be located separately from the transformers and should be within 5m of the boundary. Where less transformers will provide the load, the consumer must pay the full cost of the difference between this and the minimum arrangement.			

Drawings to be read in conjunction with applicable legislation, industry standards, codes including the WAER and WASIR

westernpower

Distribution customer connection requirements

EDM Visio 498 91 124

22kV Overhead supply
District and sole use substations
Typical metro

Date #	Aug 2018
Rev #	Initial
Sheet #	2 of 3
Draw #	DCCR 2-09-2

Transformer #	Transformer rating (kVA)	HV system arrangement	DSPM section 3 substation drawings
Comments			
Three or Four	630 to 1000 Non-MPS	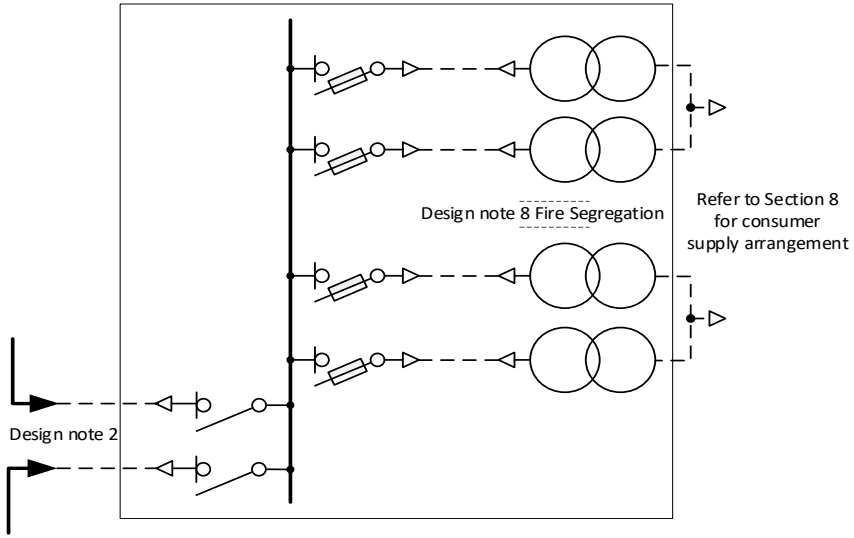	Refer to the DSPM for substation technical and engineering details
Alternative to the previous arrangement where the consumer is prepared to pay the full cost of the second cable and isolator for improved security			

Drawings to be read in conjunction with applicable legislation, industry standards, codes including the WAER and WASIR

westernpower

Distribution customer connection requirements

EDM Visio 498 91 124

22kV Overhead supply
District and sole use substations
Typical metro

Date #	Aug 2018
Rev #	Initial
Sheet #	3 of 3
Draw #	DCCR 2-09-3

Transformer #	Transformer rating (kVA)	HV system arrangement	DSPM section 3 substation drawings
Comments			
One	Up to 630 MPS	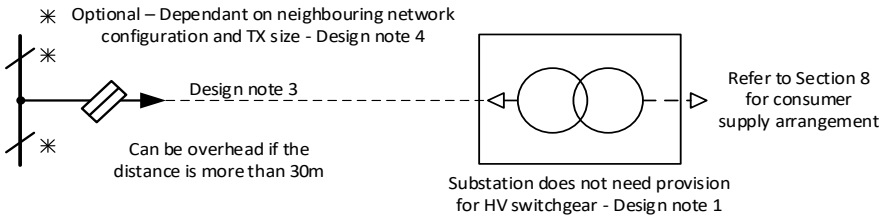	Refer to the DSPM for substation technical and engineering details
One	Up to 1000 Non-MPS	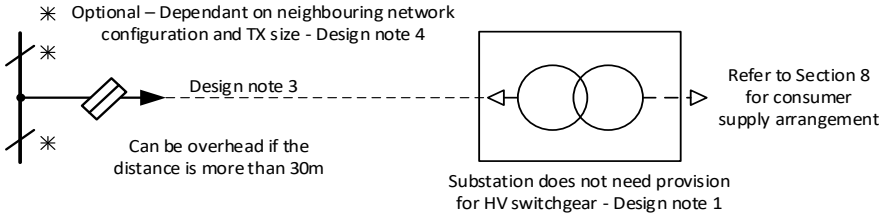	
Two	630 to 1000 Non-MPS	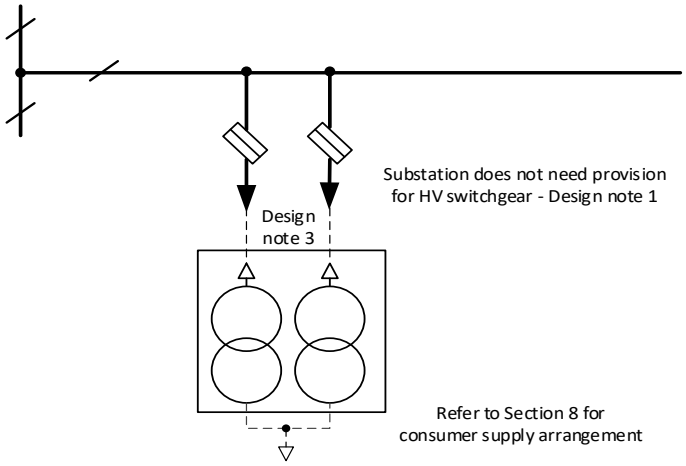	

Drawings to be read in conjunction with applicable legislation, industry standards, codes including the WAER and WASIR

westernpower

Distribution customer connection requirements

EDM Visio 498 91 124

22kV Overhead supply
District and sole use substations

Typical rural

Date # Aug 2018
Rev # Initial
Sheet # 1 of 2
Draw # DCCR 2-10-1

Transformer #	Transformer rating (kVA)	HV system arrangement	DSPM section 3 substation drawings
Comments			
Three or Four	630 to 1000 Non-MPS	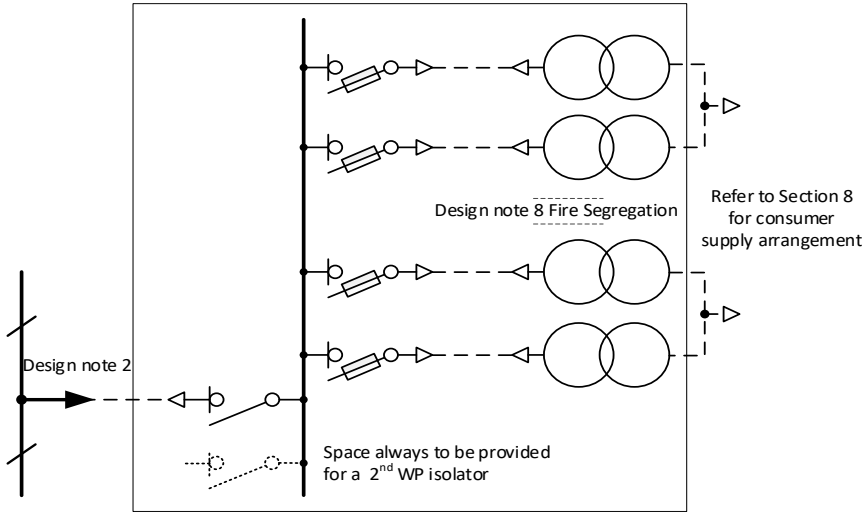	Refer to the DSPM for substation technical and engineering details
Where the transformers are to be located within 30m of the property boundary, the HV switchroom can be adjacent to the transformers. However where the transformers are to be located more than 30m from the boundary the HV switchboard is to be located separately from the transformers and should be within 5m of the boundary. Where less transformers will provide the load, the consumer must pay the full cost of the difference between this and the minimum arrangement.			
Three or Four	630 to 1000 Non-MPS	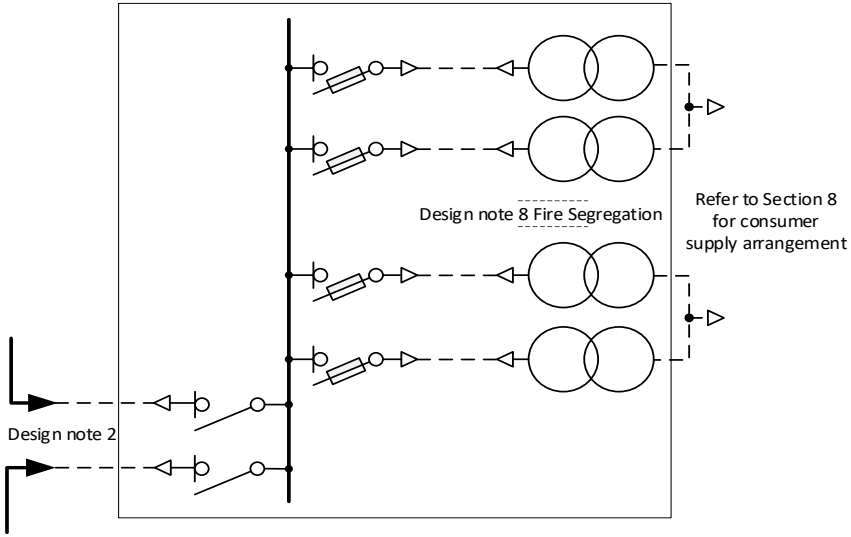	
Alternative to the previous arrangement where the consumer is prepared to pay the full cost of the second cable and isolator for improved security			

Drawings to be read in conjunction with applicable legislation, industry standards, codes including the WAER and WASIR

westernpower

Distribution customer connection requirements

EDM Visio 498 91 124

22kV Overhead supply
District and sole use substations

Typical rural

Date #	Aug 2018
Rev #	Initial
Sheet #	2 of 2
Draw #	DCCR 2-10-2

Transformer #	Transformer rating (kVA)	HV system arrangement	DSPM section 3 substation drawings
Comments			
One	Up to 630 MPS	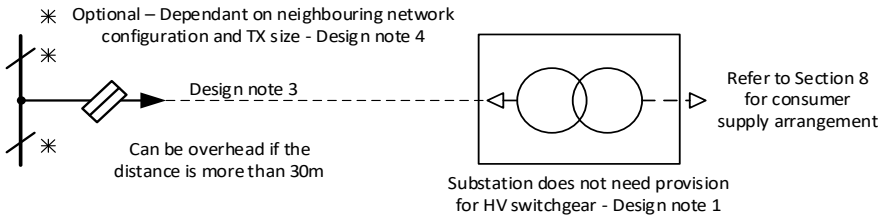	Refer to the DSPM for substation technical and engineering details
One	315 or 1000 Non-MPS	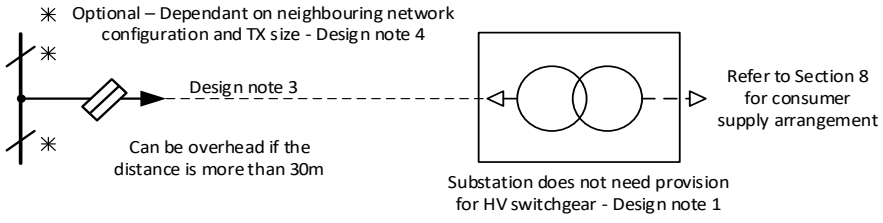	
Two	1000 Non-MPS	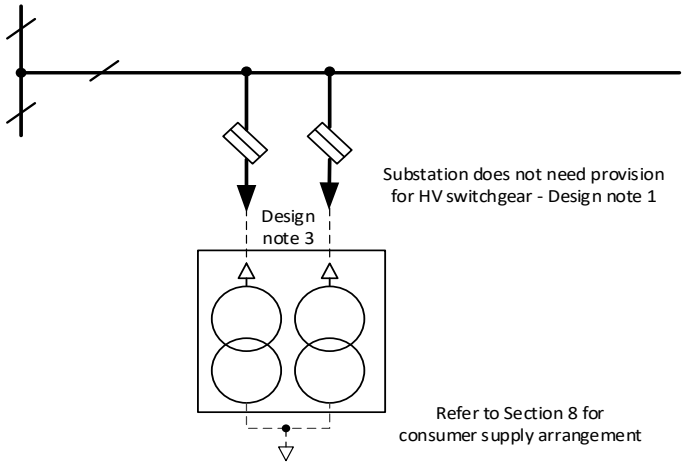	

Drawings to be read in conjunction with applicable legislation, industry standards, codes including the WAER and WASIR

westernpower

Distribution customer connection requirements

EDM Visio 498 91 124

33kV Overhead supply
District and sole use substations

Typical rural

Date #	Aug 2018
Rev #	Initial
Sheet #	1 of 1
Draw #	DCCR 2-15-1

9.3.5 Overhead consumer owned

Load range / Comments	HV system arrangement	DSPM section 3 substation drawings
>1.5 MVA up to 2 MVA Dependant on circumstances this arrangement may be considered for a HV consumer whose load is ≤ 2MVA but > 1.5 MVA	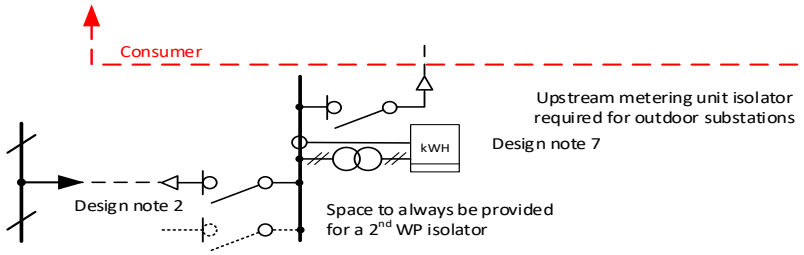	Refer to the DSPM for substation technical and engineering details
>1.5 MVA up to 2 MVA Alternative to the above where the consumer is prepared to pay the full cost of the 2nd cable and isolator for improved security	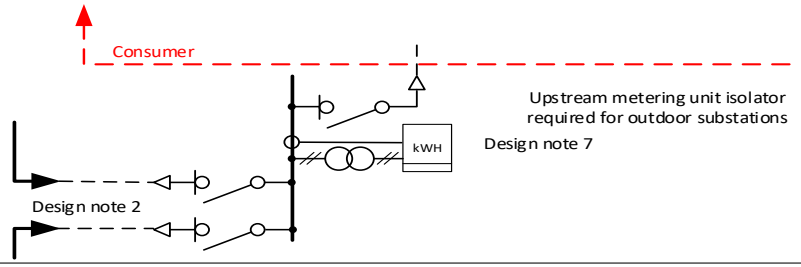	
>2 MVA up to 4 MVA Each switchboard is supplied off a separate feeder (Two feeders operating radially) – Note 11	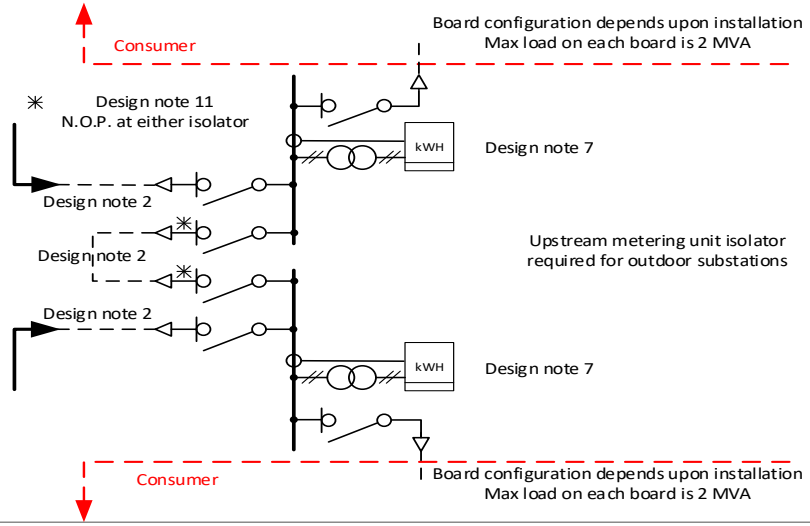	

Drawings to be read in conjunction with applicable legislation, industry standards, codes including the WAER and WASIR

westernpower

Distribution customer connection requirements

EDM Visio 498 91 124

6.6kV Overhead supply
Consumer owned substation

Typical metro

Date # Aug 2018
Rev # Initial
Sheet # 1 of 2
Draw # DCCR 2-02-1

Load range	HV system arrangement	DSPM section 3 substation drawings
Comments		
Above 4 MVA Dedicated feeders from the same zone substation busbar operating on a closed ring with directional O/C and E/F or pilot protection. Notes 12 and 13	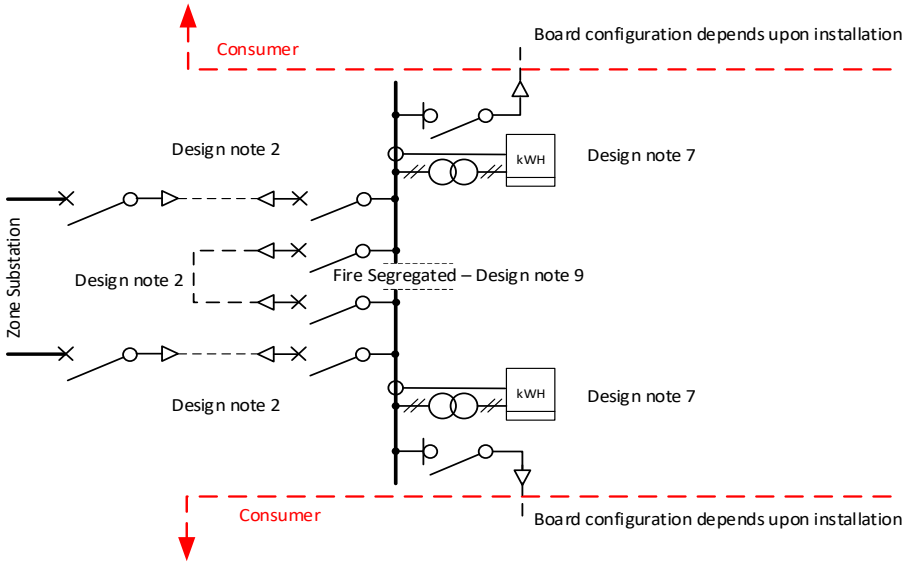	Refer to the DSPM for substation technical and engineering details

Drawings to be read in conjunction with applicable legislation, industry standards, codes including the WAER and WASIR

westernpower

Distribution customer connection requirements

EDM Visio 498 91 124

6.6kV Overhead supply
Consumer owned substation

Typical metro

Date #	Aug 2018
Rev #	Initial
Sheet #	2 of 2
Draw #	DCCR 2-02-2

Load range / Comments	HV system arrangement	DSPM section 3 substation drawings
>2 MVA up to 4 MVA Refer to Note 14 for connections <2 MVA	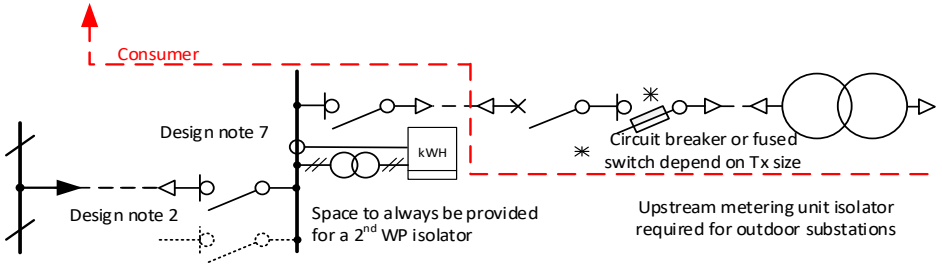	Refer to the DSPM for substation technical and engineering details
>2 MVA up to 4 MVA Alternative to the above where the consumer is prepared to pay the full cost of the 2nd cable and isolator for improved security	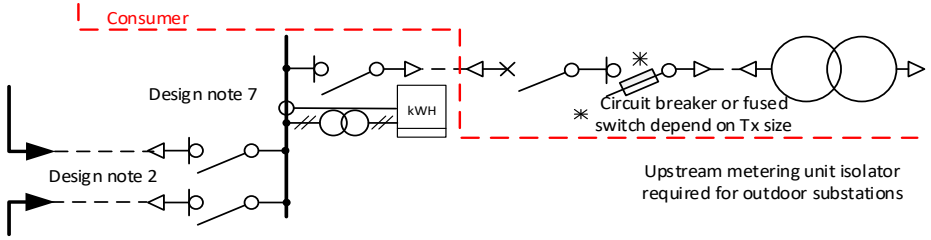	
>4 MVA up to 8 MVA Each switchboard is supplied off a separate feeder (Two feeders operating radially) – Note 11	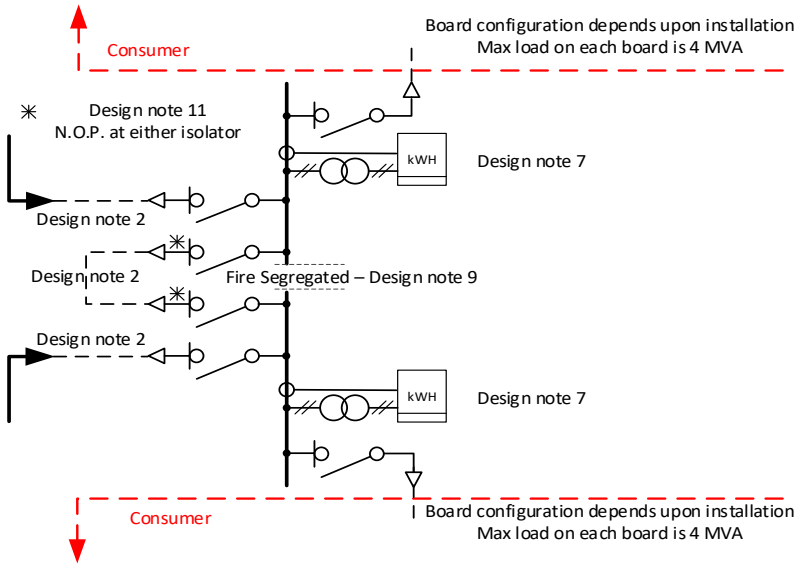	

Drawings to be read in conjunction with applicable legislation, industry standards, codes including the WAER and WASIR

westernpower

Distribution customer connection requirements

EDM Visio 498 91 124

11kV Overhead supply
Consumer owned substation

Typical metro

Date #	Sept 2020
Rev #	One
Sheet #	1 of 2
Draw #	DCCR 2-06-1

Load range	HV system arrangement	DSPM section 3 substation drawings
Comments		
Above 8 MVA Dedicated feeders from the same zone substation busbar operating on a closed ring with directional O/C and E/F or pilot protection. Notes 12 and 13	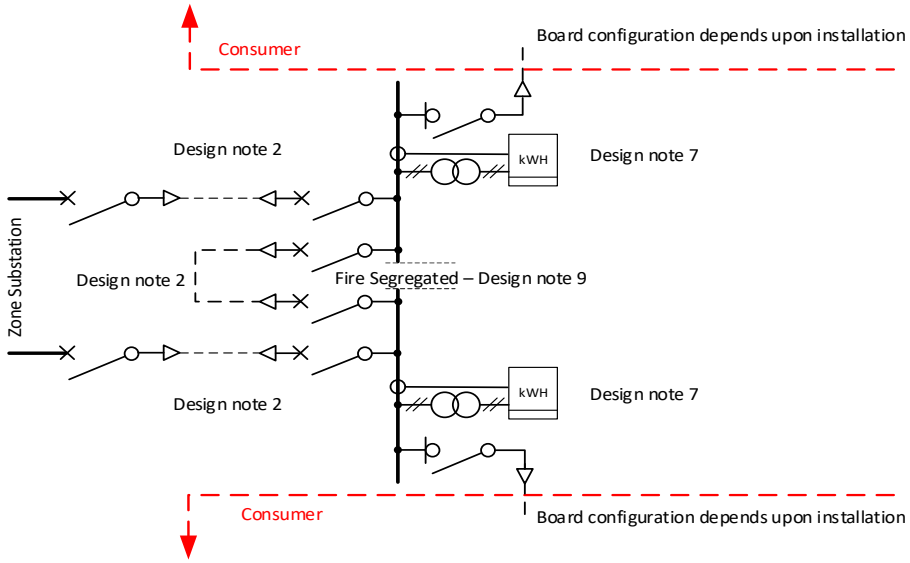	Refer to the DSPM for substation technical and engineering details

Drawings to be read in conjunction with applicable legislation, industry standards, codes including the WAER and WASIR

westernpower

Distribution customer connection requirements

EDM Visio 498 91 124

11kV Overhead supply
Consumer owned substation

Typical metro

Date #	Aug 2018
Rev #	Initial
Sheet #	2 of 2
Draw #	DCCR 2-06-2

Load range / Comments	HV system arrangement	DSPM section 3 substation drawings
>2 MVA up to 4 MVA Refer to Note 14 for connections <2 MVA	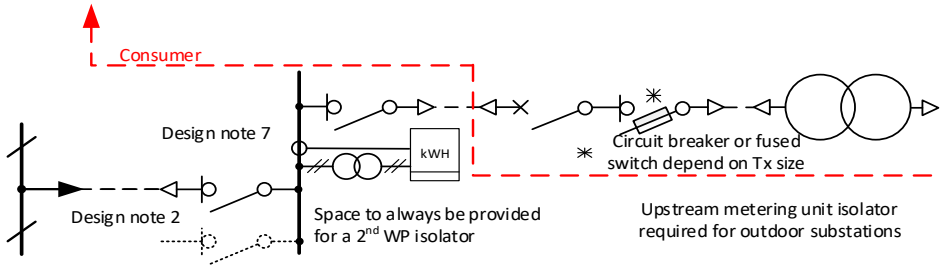	Refer to the DSPM for substation technical and engineering details
>2 MVA up to 4 MVA Alternative to the above where the consumer is prepared to pay the full cost of the 2nd cable and isolator for improved security	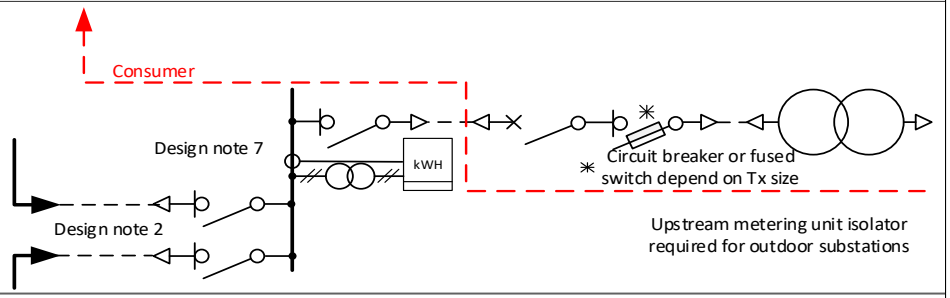	
>4 MVA up to 8 MVA Each switchboard supplied from a separate leg of a Y split feeder, (may be from the same or different feeders) – Note 11	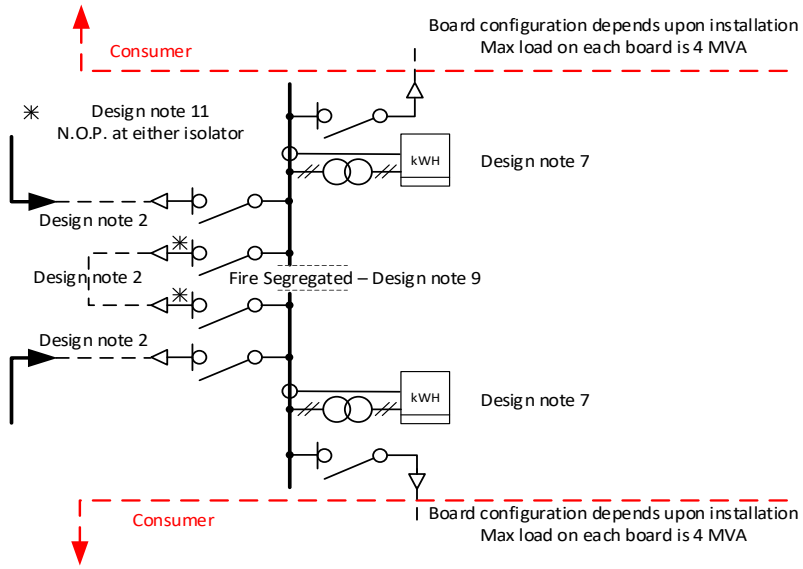	

Drawings to be read in conjunction with applicable legislation, industry standards, codes including the WAER and WASIR

westernpower

Distribution customer connection requirements

EDM Visio 498 91 124

22kV Overhead supply
Consumer owned substation

Typical metro

Date # Sept 2020
Rev # One
Sheet # 1 of 2
Draw # DCCR 2-11-1

Load range / Comments	HV system arrangement	DSPM section 3 substation drawings
>8 MVA up to 15 MVA Single dedicated feeder from the zone substation to the consumer. (Minimum arrangement) – Note 13	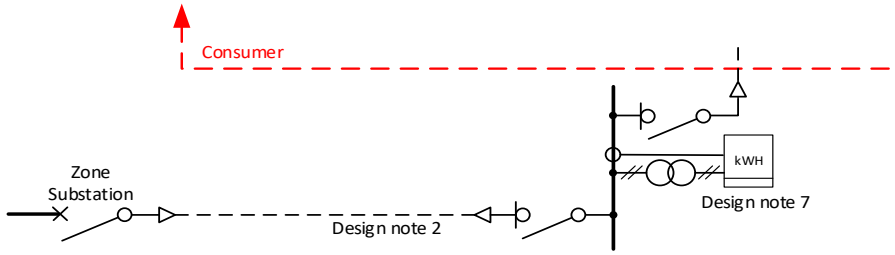	Refer to the DSPM for substation technical and engineering details
Above 15 MVA Dedicated feeders from the same zone substation busbar operating on a closed ring with directional O/C and E/F or pilot protection. Notes 12 and 13 Note:- Can also be used as an alternative to the above where the consumer is prepared to pay the additional costs. In such cases isolators can be used in place of circuit breakers and one WP bus section switch must be a N.O.P. Notes 11 & 13.	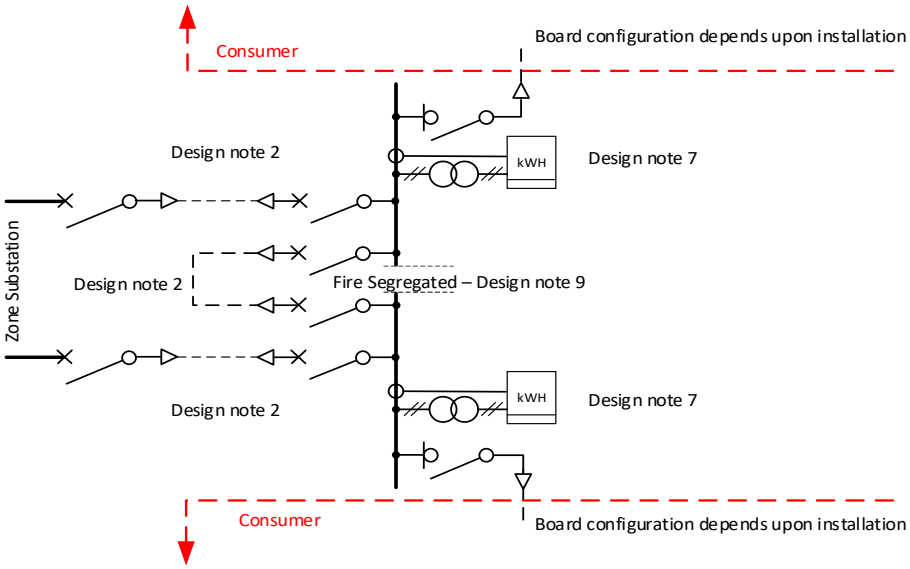	

Drawings to be read in conjunction with applicable legislation, industry standards, codes including the WAER and WASIR

westernpower

Distribution customer connection requirements

EDM Visio 498 91 124

22kV Overhead supply
Consumer owned substation

Typical metro

Date #	Aug 2018
Rev #	Initial
Sheet #	2 of 2
Draw #	DCCR 2-11-2

Load range	HV system arrangement	DSPM section 3 substation drawings
Comments		
>2 MVA up to 4 MVA Refer to Note 14 for connections <2 MVA	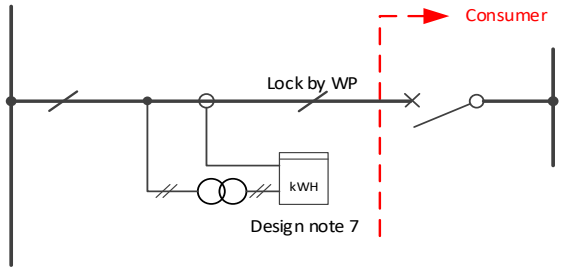	Refer to the DSPM for substation technical and engineering details
>4 MVA up to 8 MVA Each switchboard supplied from a separate leg of a Y split feeder. (May be from the same or different feeders) This arrangement may also be considered for loads as above where the consumer is prepared to pay the full cost of the additional metering unit and the two the additional isolators.	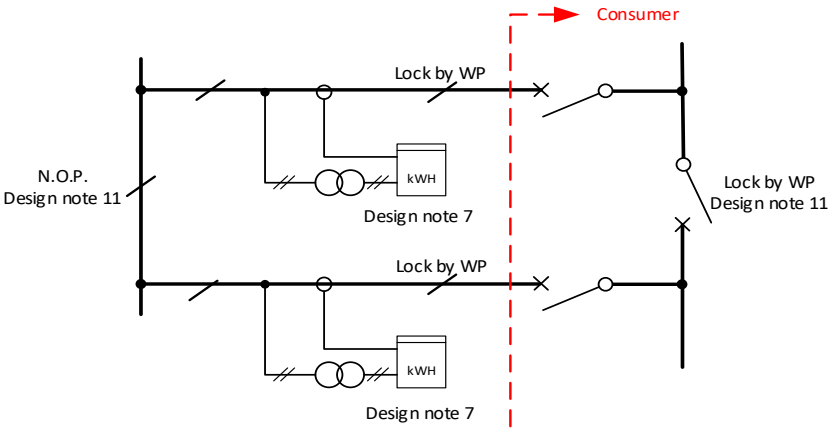	

Drawings to be read in conjunction with applicable legislation, industry standards, codes including the WAER and WASIR

westernpower

Distribution customer connection requirements

EDM Visio 498 91 124

22kV Overhead supply
Consumer owned substation

Typical rural

Date #	Sept 2020
Rev #	One
Sheet #	1 of 2
Draw #	DCCR 2-12-1

Load range / Comments	HV system arrangement	DSPM section 3 substation drawings
>8 MVA up to 15 MVA Single dedicated feeder from a zone substation to the consumer. – Note 13	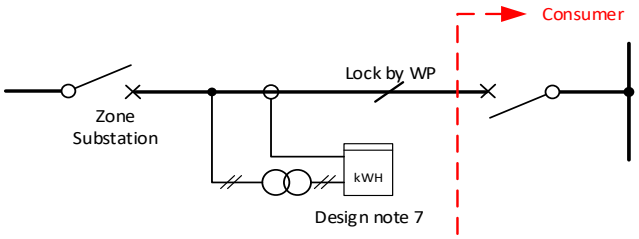	Refer to the DSPM for substation technical and engineering details
Above 15 MVA Dedicated feeders from the same zone substation busbar operating on a closed ring with directional O/C and E/F or pilot protection. Notes 12 and 13 Note:- Can also be used as an alternative to the above where the consumer is prepared to pay the additional costs. In such cases the consumer's bus section would be a N.O.P. complete with WP lock. Notes 11 and 13	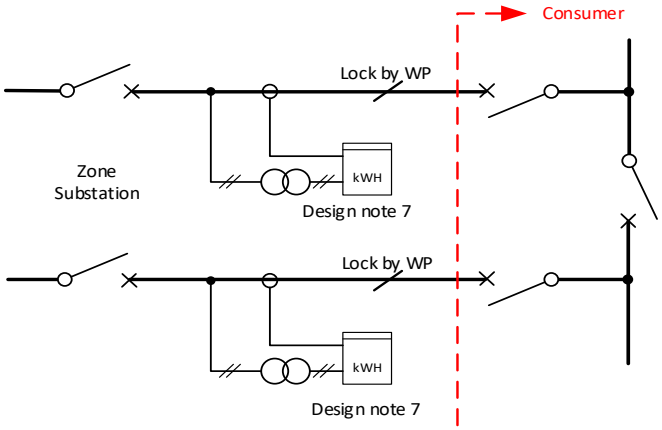	

Drawings to be read in conjunction with applicable legislation, industry standards, codes including the WAER and WASIR

westernpower

Distribution customer connection requirements

EDM Visio 498 91 124

22kV Overhead supply
Consumer owned substation

Typical rural

Date #	Aug 2018
Rev #	Initial
Sheet #	2 of 2
Draw #	DCCR 2-12-2

Load range	HV system arrangement	DSPM section 3 substation drawings
Comments		
>2 MVA up to 4 MVA Refer to Note 14 for connections <2 MVA	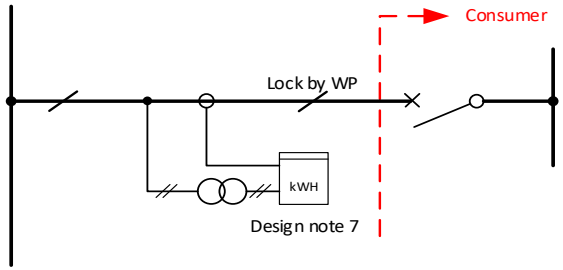	Refer to the DSPM for substation technical and engineering details
>4 MVA up to 8 MVA Each switchboard supplied from a separate leg of a Y split feeder. (May be from the same or different feeders) This arrangement may also be considered for loads as above where the consumer is prepared to pay the full cost of the additional metering unit and the two the additional isolators.	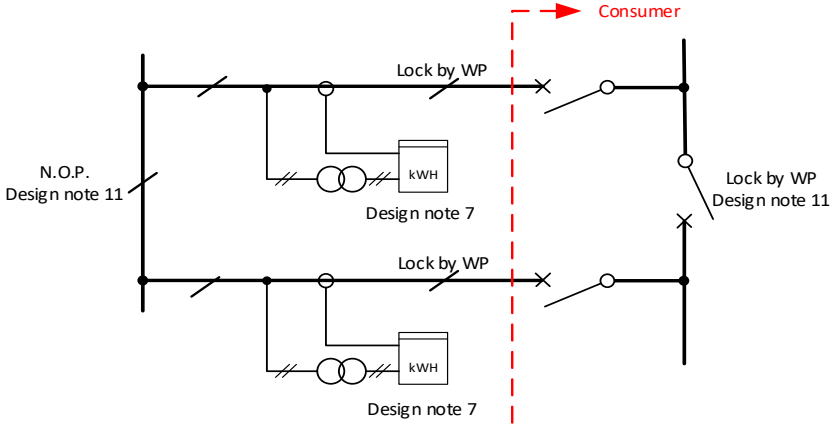	

Drawings to be read in conjunction with applicable legislation, industry standards, codes including the WAER and WASIR

westernpower

Distribution customer connection requirements

EDM Visio 498 91 124

33kV Overhead supply
Consumer owned substation

Typical rural

Date #	Sept 2020
Rev #	One
Sheet #	1 of 2
Draw #	DCCR 2-16-1

Load range	HV system arrangement	DSPM section 3 substation drawings
Comments		
>8 MVA up to 15 MVA Single dedicated feeder from a zone substation to the consumer. – Note 13	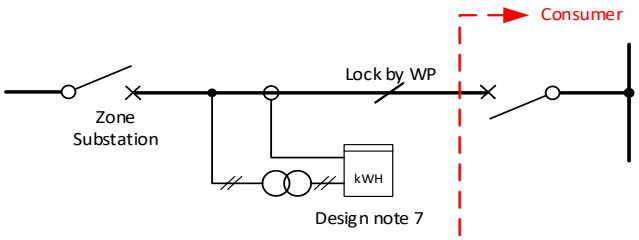	Refer to the DSPM for substation technical and engineering details
Above 15 MVA Dedicated feeders from the same zone substation busbar operating on a closed ring with directional O/C and E/F or pilot protection. Notes 12 and 13 Note:- Can also be used as an alternative to the above where the consumer is prepared to pay the additional costs. In such cases the consumer's bus section would be a N.O.P. complete with WP lock. Notes 11 and 13	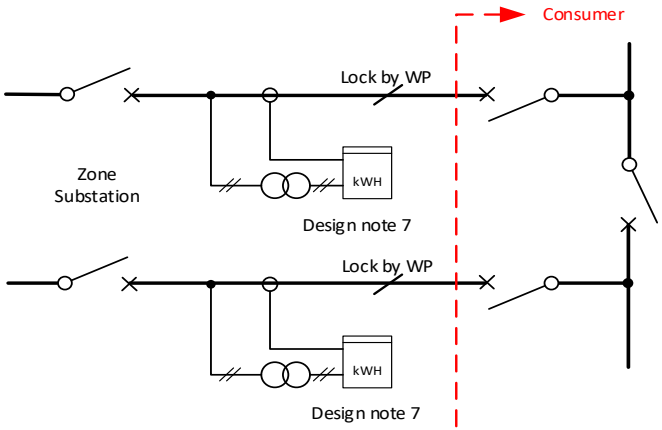	

Drawings to be read in conjunction with applicable legislation, industry standards, codes including the WAER and WASIR

westernpower

Distribution customer connection requirements

EDM Visio 498 91 124

33kV Overhead supply
Consumer owned substation

Typical rural

Date #	Aug 2018
Rev #	Initial
Sheet #	2 of 2
Draw #	DCCR 2-16-2

9.3.6 Underground district and sole use

Transformer #	Transformer rating (kVA)	HV system arrangement	DSPM section 3 substation drawings
Comments			
One	Up to 630 MPS	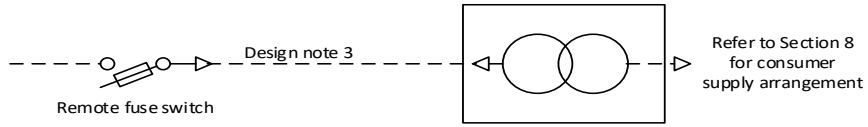	Refer to the DSPM for substation technical and engineering details
Remote fuse switch available			
One	Up to 630 MPS	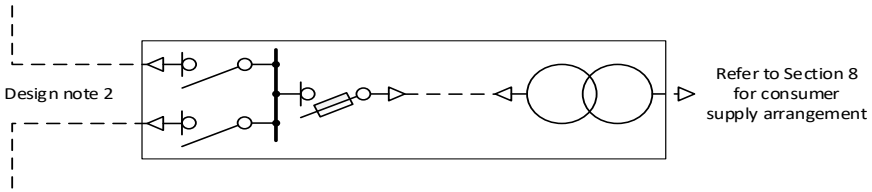	
HV switchgear required Substation located within 30m of the property boundary. - Note 2			
One	Up to 630 MPS	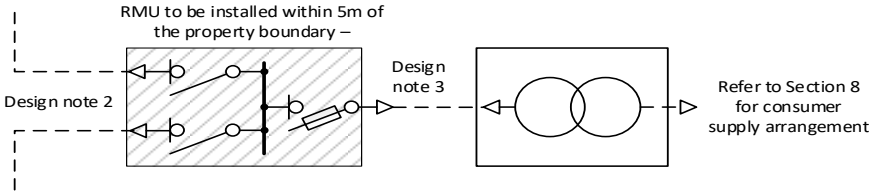	
HV switchgear required. Substation located more than 30m from the property boundary Note 2			
One	315 to 1000 Non-MPS	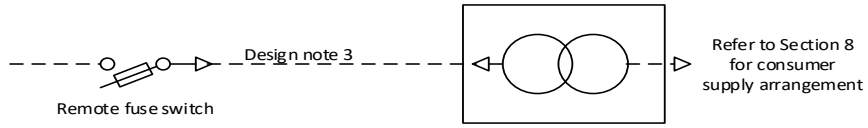	
Remote fuse switch available			

Drawings to be read in conjunction with applicable legislation, industry standards, codes including the WAER and WASIR

westernpower

Distribution customer connection requirements

EDM Visio 498 91 124

6.6kV Underground supply
District and sole use substations

Typical metro

Date #	Aug 2018
Rev #	Initial
Sheet #	1 of 2
Draw #	DCCR 2-03-1

Transformer #	Transformer rating (kVA)	HV system arrangement	DSPM section 3 substation drawings
Comments			
One	315 to 1000 Non-MPS	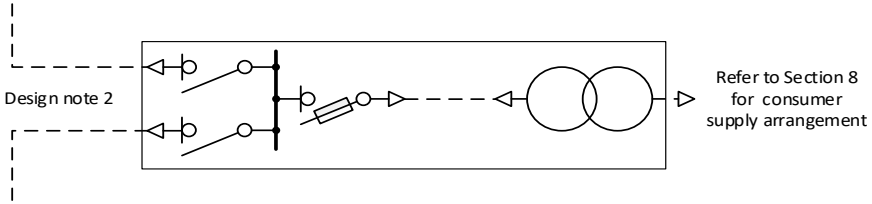	Refer to the DSPM for substation technical and engineering details
HV switchgear required. Substation located within 30m of the property boundary. - Note 2			
One	315 to 1000 Non-MPS	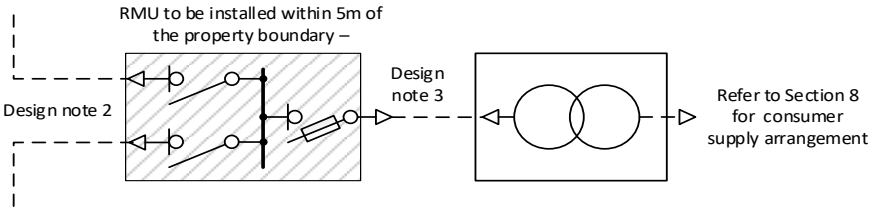	
HV switchgear required. Substation located more than 30m from the property boundary Note 2			
Two	630 to 1000 Non-MPS	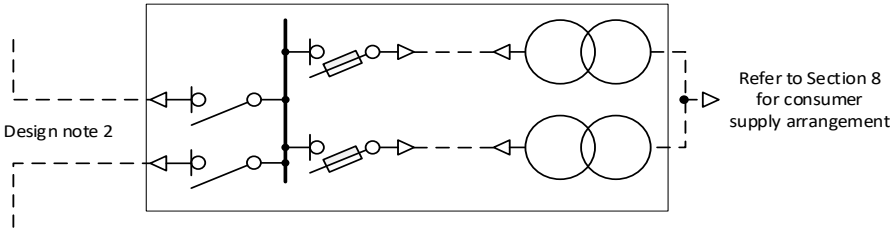	
Substation located within 30m of the property boundary. - Note 2. Where one large transformer will provide the load, the consumer must pay the full cost difference between this and the single transformer arrangement			
Two	630 to 1000 Non-MPS	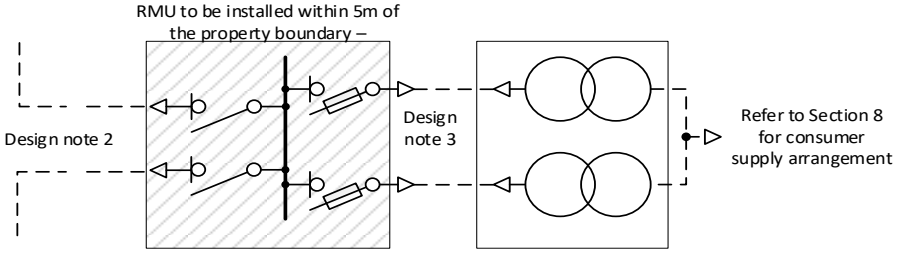	
Substation located within 30m of the property boundary. - Note 2. Where one large transformer will provide the load, the consumer must pay the full cost difference between this and the single transformer arrangement			

Drawings to be read in conjunction with applicable legislation, industry standards, codes including the WAER and WASIR

westernpower

Distribution customer connection requirements

EDM Visio 498 91 124

6.6kV Underground supply
District and sole use substations

Typical metro

Date # Aug 2018
Rev # Initial
Sheet # 2 of 2
Draw # DCCR 2-03-2

westernpower

Distribution customer connection requirements

EDM Visio 498 91 124

11kV Underground supply
District and sole use substations

Typical metro

Date # Aug 2018

Rev # Initial

Sheet # 1 of 3

Draw # DCCR 2-07-1

Drawings to be read in conjunction with applicable legislation, industry standards, codes including the WAER and WASIR

Transformer #	Transformer rating (kVA)	Comments	HV system arrangement	DSPM section 3 substation drawings
One	Up to 630 MPS	Remote fuse switch available	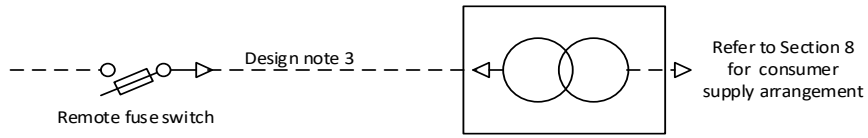	Refer to the DSPM for substation technical and engineering details
One	Up to 630 MPS	HV switchgear required Substation located within 30m of the property boundary. - Note 2	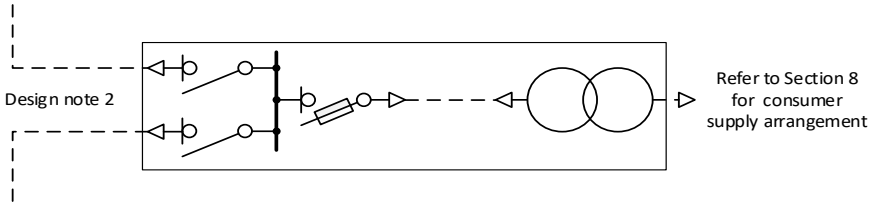	
One	Up to 630 MPS	HV switchgear required. Substation located more than 30m from the property boundary Note 2	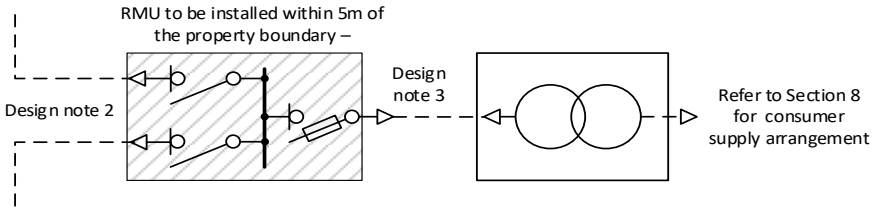	
One	315 to 1000 Non-MPS	Remote fuse switch available	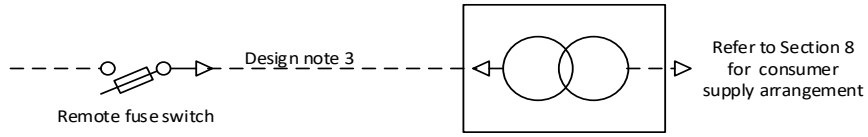	

Transformer #	Transformer rating (kVA)	HV system arrangement	DSPM section 3 substation drawings
Comments			
One	315 to 1000 Non-MPS	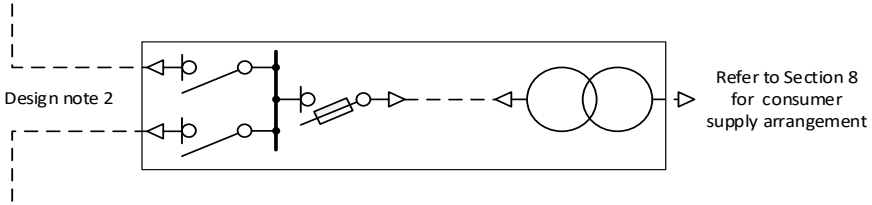	Refer to the DSPM for substation technical and engineering details
HV switchgear required. Substation located within 30m of the property boundary. - Note 2			
One	315 to 1000 Non-MPS	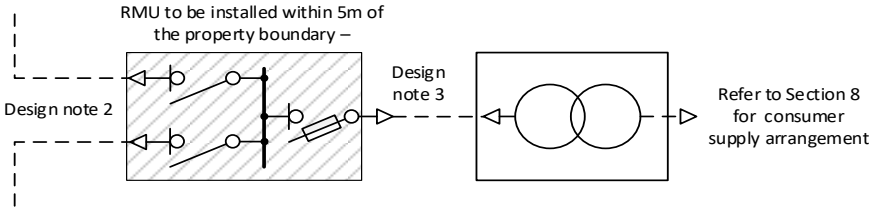	
HV switchgear required. Substation located more than 30m from the property boundary Note 2			
Two	630 to 1000 Non-MPS	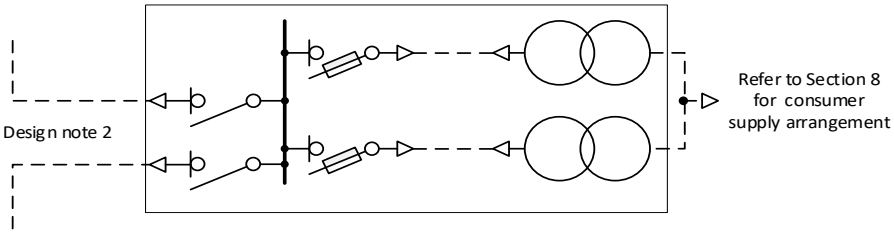	
Remote fuse switch available			
Two	630 to 1000 Non-MPS	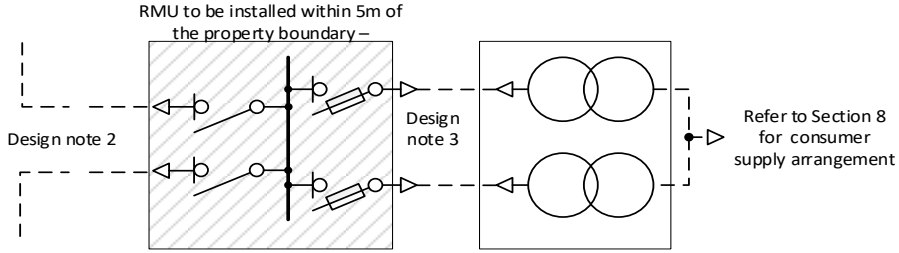	
Substation located within 30m of the property boundary. - Note 2. Where one large transformer will provide the load, the consumer must pay the full cost difference between this and the single transformer arrangement			

Drawings to be read in conjunction with applicable legislation, industry standards, codes including the WAER and WASIR

westernpower

Distribution customer connection requirements

EDM Visio 498 91 124

11kV Underground supply
District and sole use substations

Typical metro

Date #	Aug 2018
Rev #	Initial
Sheet #	2 of 3
Draw #	DCCR 2-07-2

Transformer #	Transformer rating (kVA)
Three to Four	630 to 1000 Non-MPS

Comments

Where the transformers are to be located within 30m of the property boundary, the HV switchroom can be adjacent to the transformers. However where the transformers are to be located more than 30m from the boundary the HV switchboard is to be located separately from the transformers and should be within 5m of the boundary. Where less transformers will provide the load, the consumer must pay the full cost of the difference between this and the minimum arrangement.

HV system arrangement

DSPM section 3 substation drawings

Refer to the DSPM for substation technical and engineering details

Drawings to be read in conjunction with applicable legislation, industry standards, codes including the WAER and WASIR

westernpower

Distribution customer connection requirements

EDM Visio 498 91 124

11kV Underground supply
District and sole use substations

Typical metro

Date # Aug 2018

Rev # Initial

Sheet # 3 of 3

Draw # DCCR 2-07-3

Transformer #	Transformer rating (kVA)	HV system arrangement	DSPM section 3 substation drawings
Comments			
One	Up to 630 MPS	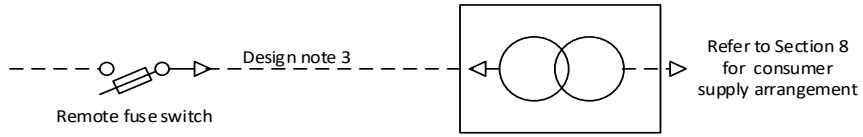	Refer to the DSPM for substation technical and engineering details
Remote fuse switch available			
One	Up to 630 MPS	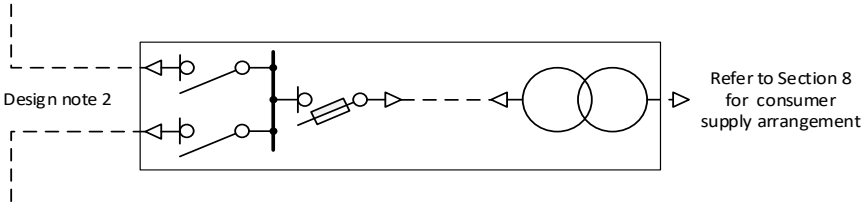	
HV switchgear required Substation located within 30m of the property boundary. - Note 2			
One	Up to 630 MPS	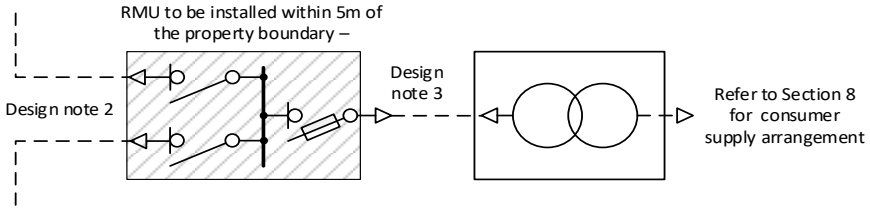	
HV switchgear required. Substation located more than 30m from the property boundary Note 2			
One	Up to 1000 Non-MPS	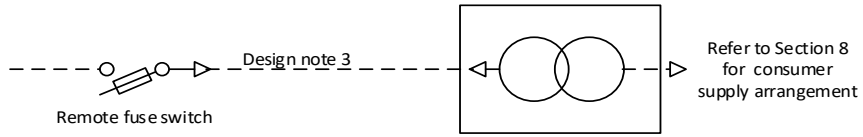	
Remote fuse switch available			

Drawings to be read in conjunction with applicable legislation, industry standards, codes including the WAER and WASIR

westernpower

Distribution customer connection requirements

EDM Visio 498 91 124

22kV Underground supply
District and sole use substations

Typical metro or rural

Date #	Aug 2018
Rev #	Initial
Sheet #	1 of 3
Draw #	DCCR 2-13-1

Transformer #	Transformer rating (kVA)	HV system arrangement	DSPM section 3 substation drawings
Comments			
One	315 to 1000 Non-MPS	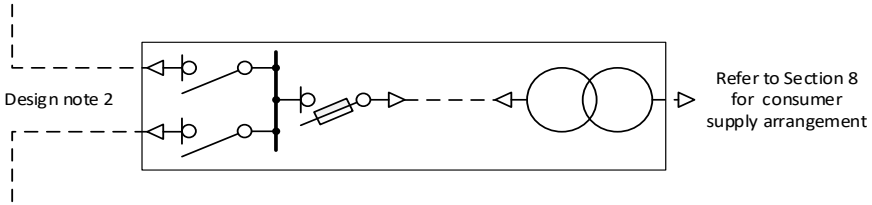	Refer to the DSPM for substation technical and engineering details
HV switchgear required. Substation located within 30m of the property boundary. - Note 2			
One	315 to 1000 Non-MPS	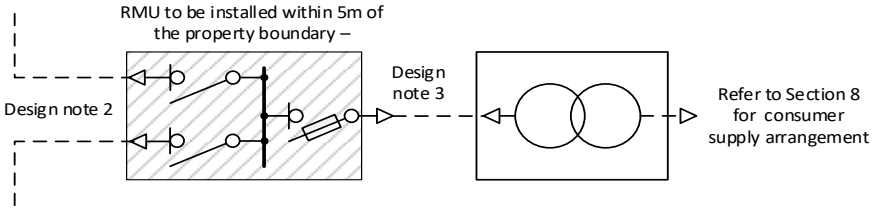	
HV switchgear required. Substation located more than 30m from the property boundary Note 2			
Two	630 to 1000 Non-MPS	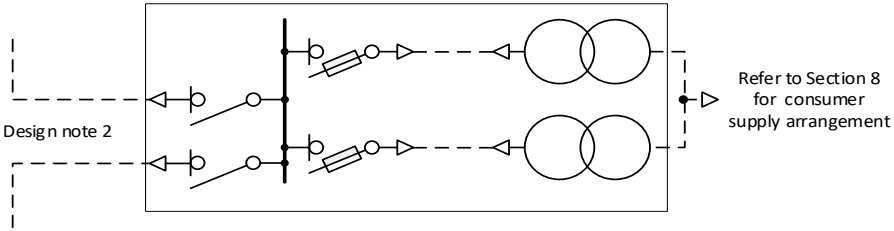	
Remote fuse switch available			
Two	630 to 1000 Non-MPS	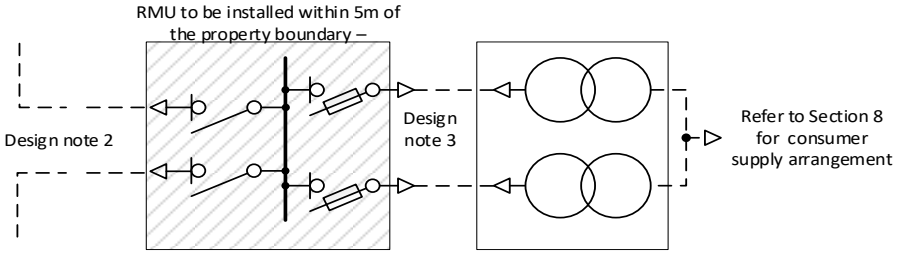	
Substation located within 30m of the property boundary. - Note 2. Where one large transformer will provide the load, the consumer must pay the full cost difference between this and the single transformer arrangement			

Drawings to be read in conjunction with applicable legislation, industry standards, codes including the WAER and WASIR

westernpower

Distribution customer connection requirements

EDM Visio 498 91 124

22kV Underground supply
District and sole use substations

Typical metro or rural

Date #	Aug 2018
Rev #	Initial
Sheet #	2 of 3
Draw #	DCCR 2-13-2

Transformer #	Transformer rating (kVA)
Three to Four	630 to 1000 Non-MPS

Comments

Where the transformers are to be located within 30m of the property boundary, the HV switchroom can be adjacent to the transformers. However where the transformers are to be located more than 30m from the boundary the HV switchboard is to be located separately from the transformers and should be within 5m of the boundary. Where less transformers will provide the load, the consumer must pay the full cost of the difference between this and the minimum arrangement.

HV system arrangement

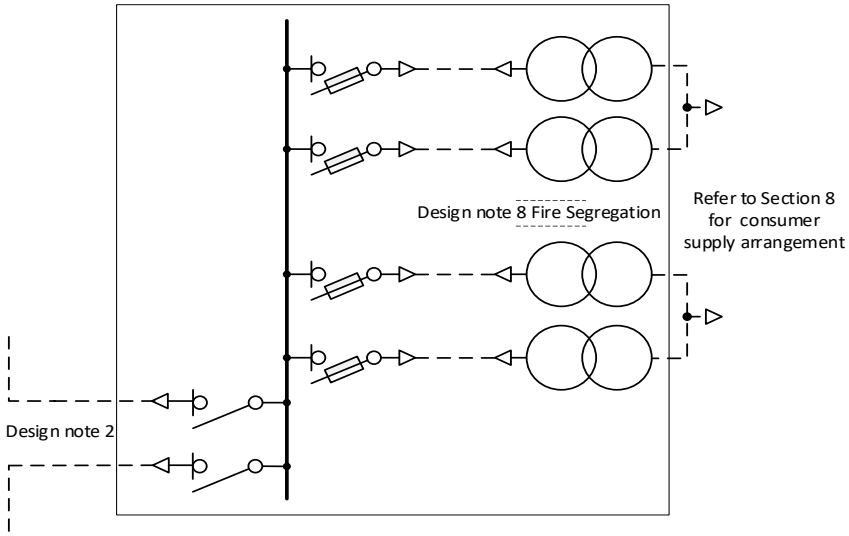

DSPM section 3 substation drawings

Refer to the DSPM for substation technical and engineering details

Drawings to be read in conjunction with applicable legislation, industry standards, codes including the WAER and WASIR

westernpower

Distribution customer connection requirements

EDM Visio 498 91 124

22kV Underground supply
District and sole use substations
Typical metro or rural

Date #	Aug 2018
Rev #	Initial
Sheet #	3 of 3
Draw #	DCCR 2-13-3

9.3.7 Underground consumer owned

Load range / Comments	HV system arrangement	DSPM section 3 substation drawings
>1.5 MVA up to 2 MVA Dependant on circumstances this arrangement may be considered for a HV consumer whose load is ≤ 2MVA but > 1.5 MVA	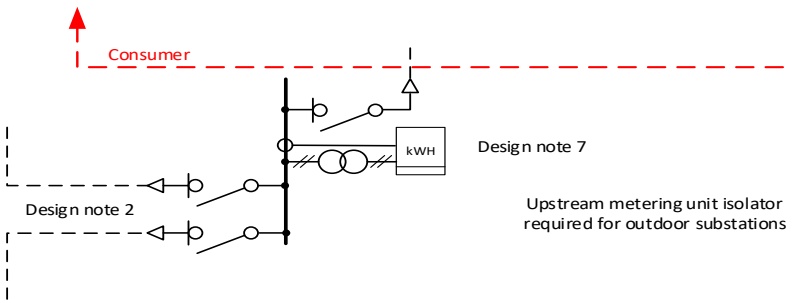	Refer to the DSPM for substation technical and engineering details
>2 MVA up to 4 MVA Each switchboard is supplied off a separate feeder (Two feeders operating radially) – Note 11	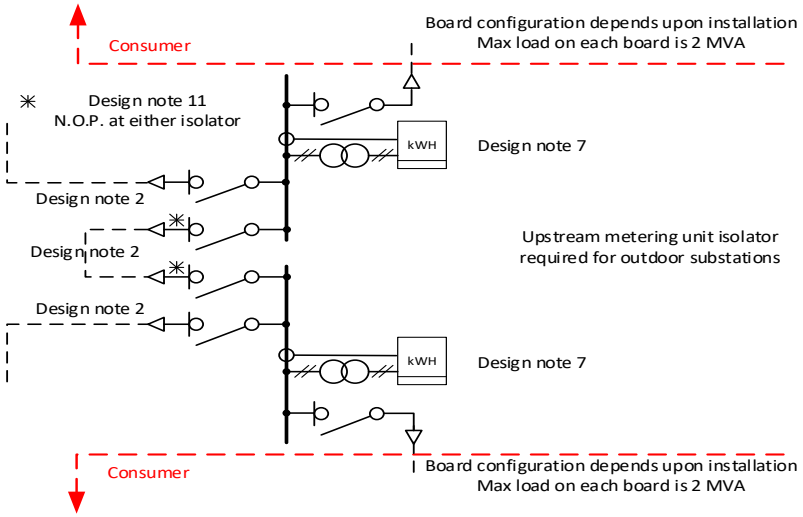	

Drawings to be read in conjunction with applicable legislation, industry standards, codes including the WAER and WASIR

westernpower

Distribution customer connection requirements

EDM Visio 498 91 124

6.6kV Underground supply
Consumer owned substation

Typical metro

Date # Aug 2018
Rev # Initial
Sheet # 1 of 2
Draw # DCCR 2-04-1

Load range	HV system arrangement	DSPM section 3 substation drawings
Comments		
Above 4 MVA Dedicated feeders from the same zone substation busbar operating on a closed ring with directional O/C and E/F or pilot protection. Notes 12 and 13	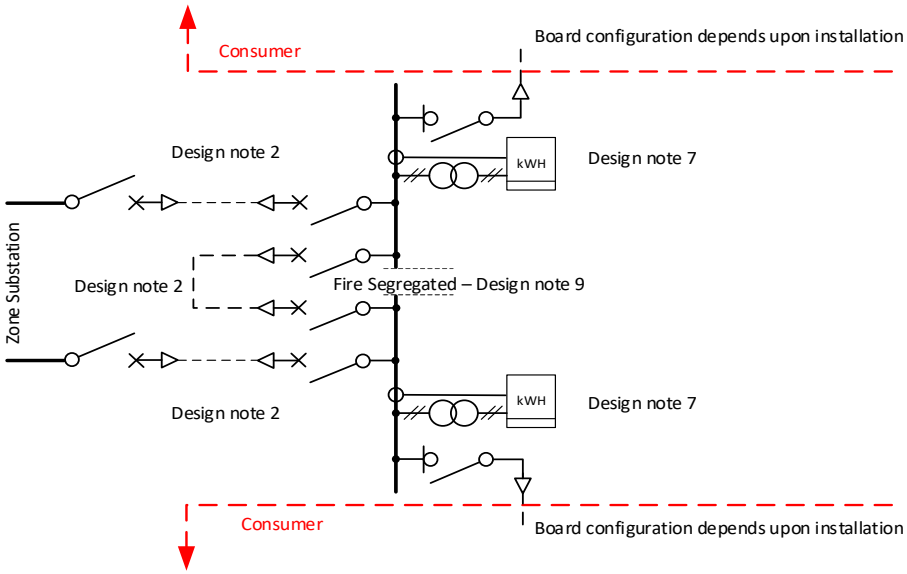	Refer to the DSPM for substation technical and engineering details

Drawings to be read in conjunction with applicable legislation, industry standards, codes including the WAER and WASIR

westernpower

Distribution customer connection requirements

EDM Visio 498 91 124

6.6kV Underground supply
Consumer owned substation

Typical metro

Date # Aug 2018

Rev # Initial

Sheet # 2 of 2

Draw # DCCR 2-04-2

Load range / Comments	HV system arrangement	DSPM section 3 substation drawings
>2 MVA up to 4 MVA Refer to Note 14 for connections <2 MVA	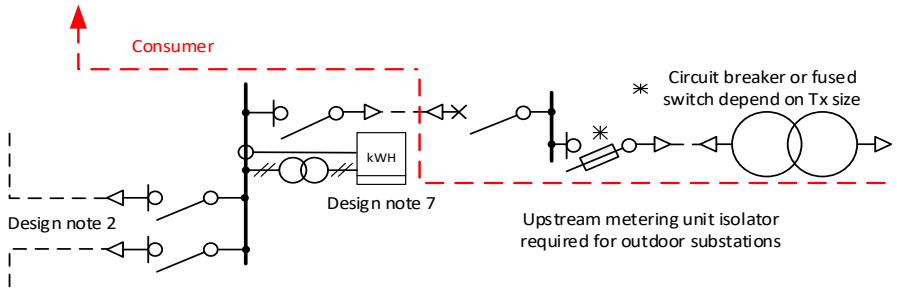	Refer to the DSPM for substation technical and engineering details
>4 MVA up to 8 MVA Each switchboard is supplied off a separate feeder (Two feeders operating radially) – Note 11	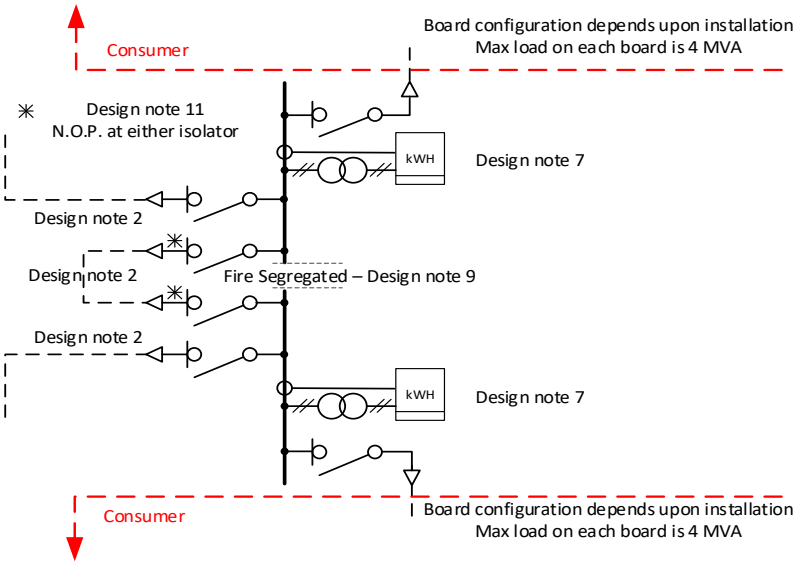	

Drawings to be read in conjunction with applicable legislation, industry standards, codes including the WAER and WASIR

westernpower

Distribution customer connection requirements

EDM Visio 498 91 124

11kV Underground supply
Consumer owned substation

Typical metro

Date # Sept 2020
Rev # One
Sheet # 1 of 3
Draw # DCCR 2-08-1

Load range	HV system arrangement	DSPM section 3 substation drawings
Comments		
Above 8 MVA Dedicated feeders from the same zone substation busbar operating on a closed ring with directional O/C and E/F or pilot protection. Notes 12 and 13	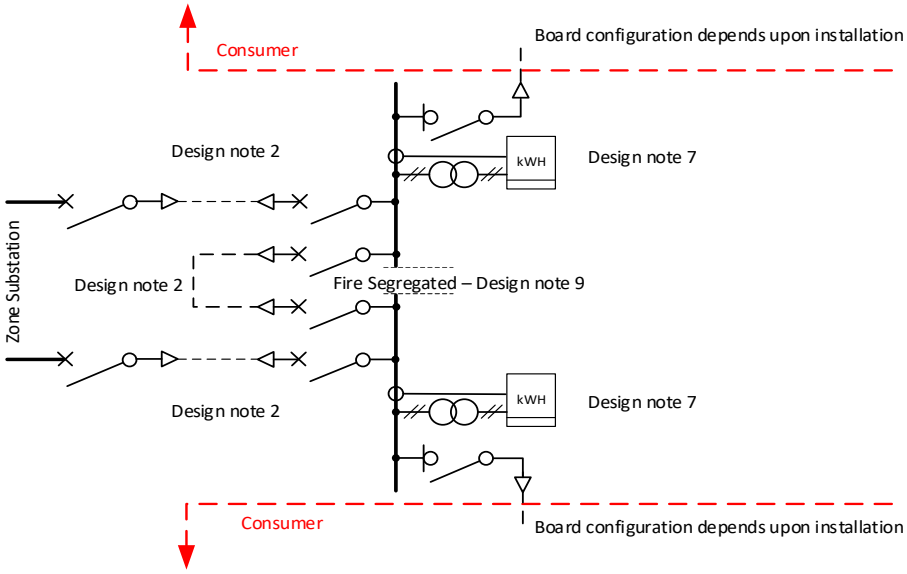	Refer to the DSPM for substation technical and engineering details

Drawings to be read in conjunction with applicable legislation, industry standards, codes including the WAER and WASIR

westernpower

Distribution customer connection requirements

EDM Visio 498 91 124

11kV Underground supply
Consumer owned substation

Typical metro

Date # Sept 2020

Rev # One

Sheet # 2 of 3

Draw # DCCR 2-08-2

Load range	HV system arrangement	DSPM section 3 substation drawings
Comments		
Up to 2 MVA CBD indoor substation Option A	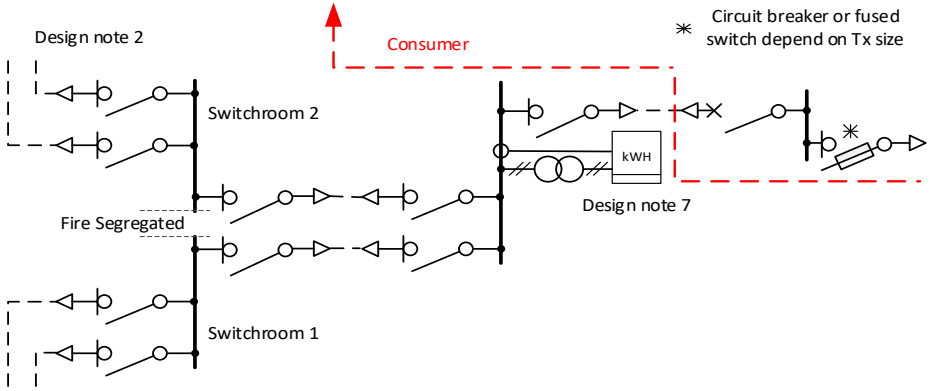	Refer to the DSPM for substation technical and engineering details
> 2 MVA up to 4 MVA CBD indoor substation Option B Each switchboard is supplied off a separate feeders (Two feeders operating radially) – Note 11	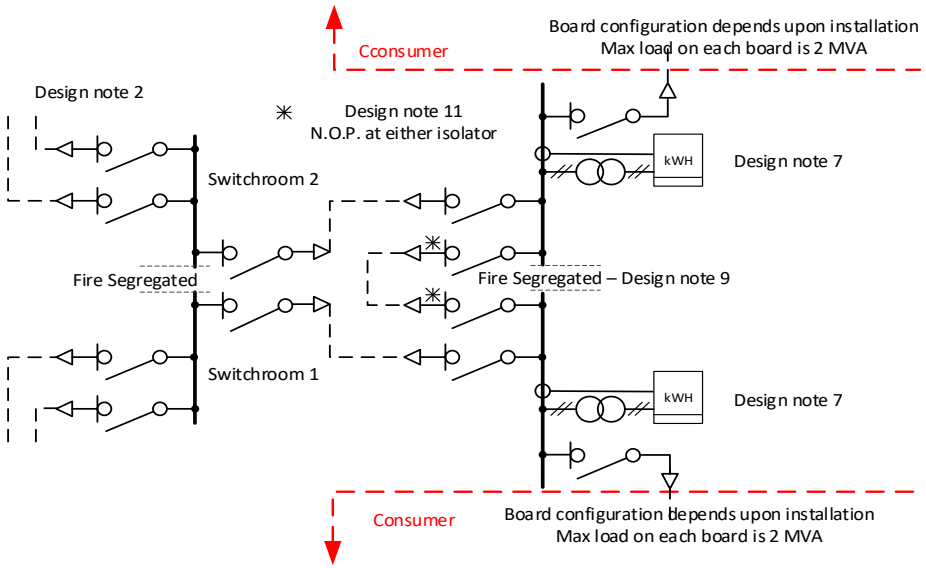	

Drawings to be read in conjunction with applicable legislation, industry standards, codes including the WAER and WASIR

westernpower

Distribution customer connection requirements

EDM Visio 498 91 124

11kV Underground supply
Consumer owned substation
CBD indoor options A and B

Date #	Sept 2020
Rev #	Initial
Sheet #	3 of 3
Draw #	DCCR 2-08-3

Load range / Comments	HV system arrangement	DSPM section 3 substation drawings
>2 MVA up to 4 MVA Refer to Note 14 for connections <2 MVA	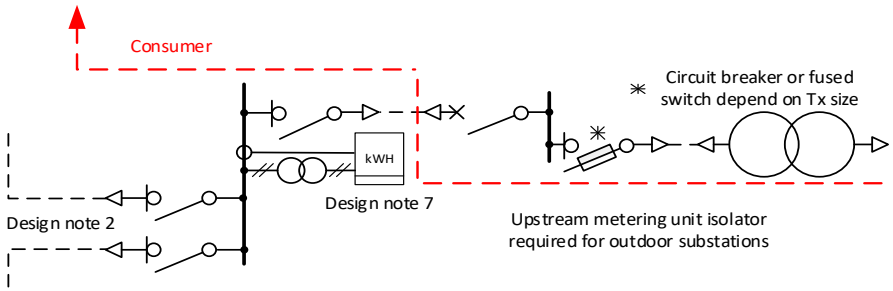	Refer to the DSPM for substation technical and engineering details
>4 MVA up to 8 MVA Each switchboard is supplied from a separate leg of a Y split feeder(May be from the same or difference feeders) – Note 11	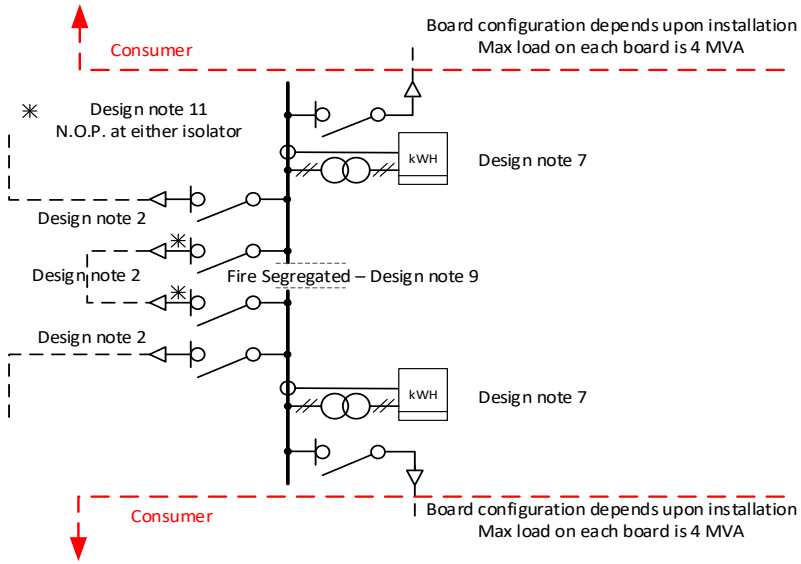	

Drawings to be read in conjunction with applicable legislation, industry standards, codes including the WAER and WASIR

westernpower

Distribution customer connection requirements

EDM Visio 498 91 124

22kV Underground supply
Consumer owned substation

Typical metro or rural

Date #	Sept 2020
Rev #	One
Sheet #	1 of 2
Draw #	DCCR 2-14-1

Load range / Comments	HV system arrangement	DSPM section 3 substation drawings
>8 MVA up to 15 MVA Single dedicated feeder from the zone substation to the consumer. (Minimum arrangement) – Note 13	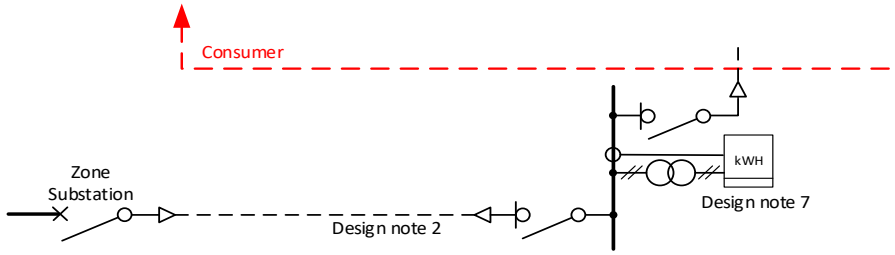	Refer to the DSPM for substation technical and engineering details
Above 15 MVA Dedicated feeders from the same zone substation busbar operating on a closed ring with directional O/C and E/F or pilot protection. Notes 12 and 13 Note:- Can also be used as an alternative to the above where the consumer is prepared to pay the additional costs. In such cases isolators can be used in place of circuit breakers and one WP bus section switch must be a N.O.P. Notes 11 & 13.	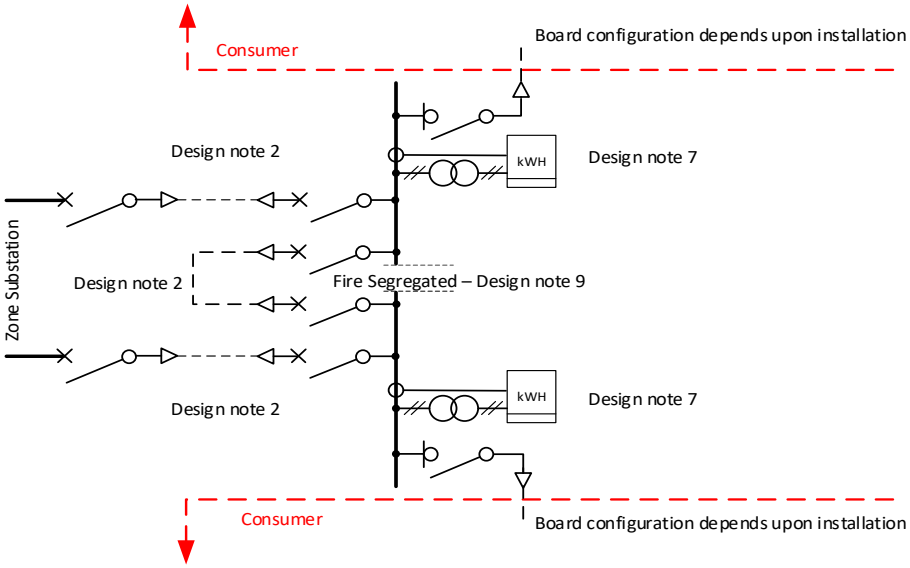	

Drawings to be read in conjunction with applicable legislation, industry standards, codes including the WAER and WASIR

westernpower

Distribution customer connection requirements

EDM Visio 498 91 124

22kV Underground supply
Consumer owned substation

Typical metro or rural

Date # Aug 2018
Rev # Initial
Sheet # 2 of 2
Draw # DCCR 2-14-2

Document End